Dijkstra’s Algorithm

Animations

Sensitivity: Internal

Shortest Path Problem

Definition: Find the shortest path between two vertices (source and destination) such that the sum of the weights of it's edges are minimised.

- Perhaps one of the most fundamental problems in Mathematics and Computer Science
- Huge implications on routing and traffic problems, e.g. vehicular, telecommunications.
- If you've used Google Maps, you've asked to solve a form of shortest path problem!

Sensitivity: Internal

Blue Peter Example

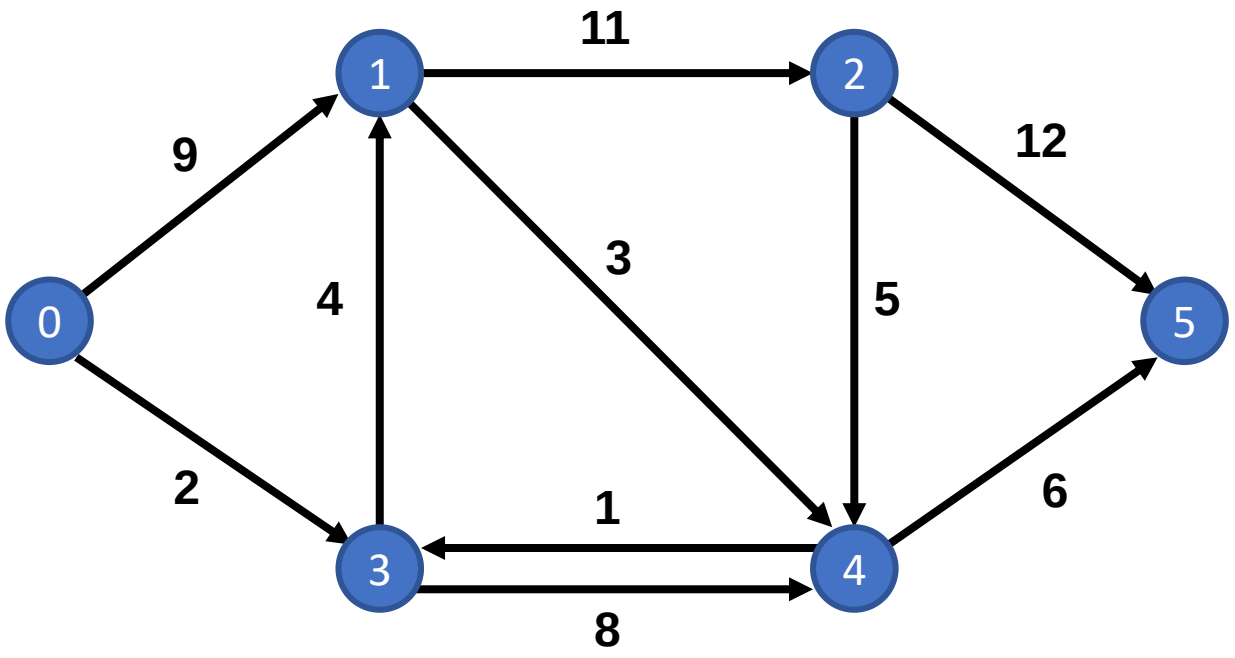

What is the shortest path between 0 and 5?

Sensitivity: Internal

Blue Peter Example

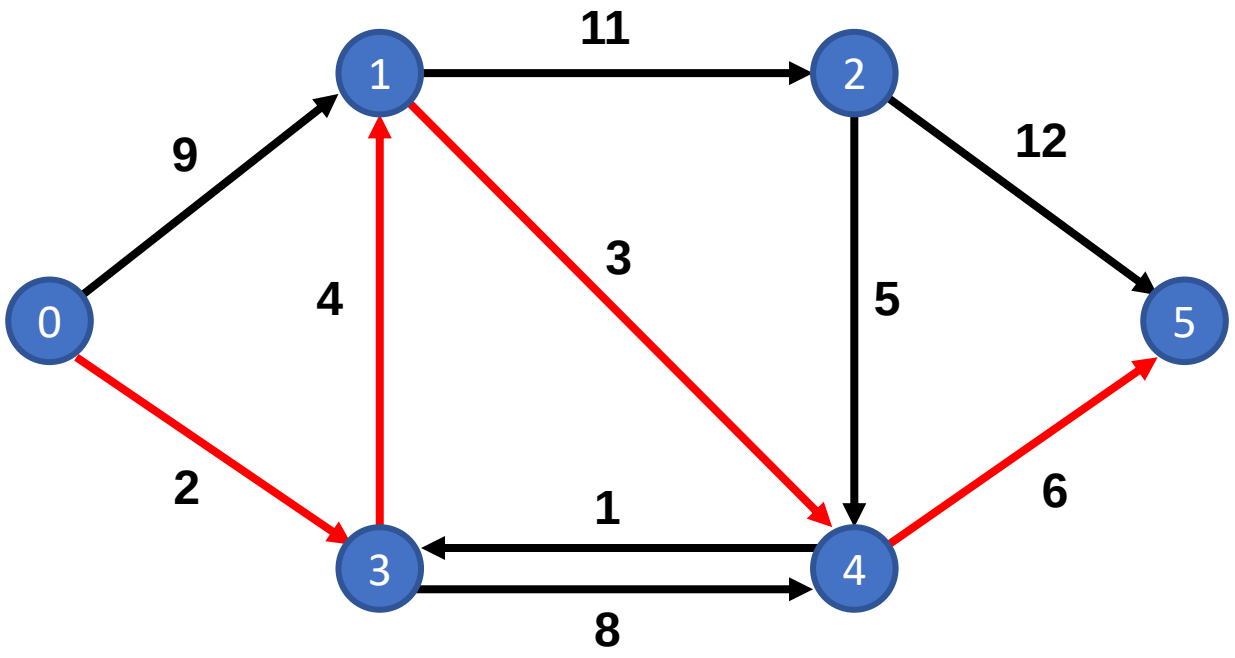

Shortest path between 0 and 5 is 0-3-1-4-5 of length 15

Sensitivity: Internal

Dijkstra’s Algorithm

- Originally designed to test the limitations of computing power by Edsger Wybe Dijkstra in 1956
- Still widely used and researched today!
- Google uses an advanced pre-processing speed-up technique known as contraction hierarchies.

Edges weights need to be nonnegative! Otherwise use Bellman-Ford

Homework: Investigate Bellman-Ford Algorithm, this can also detect negative weight cycles

1. Initialise the network, source vertex has a distance of 0 and all other vertices a distance of ∞, label all vertices as **temporary**
2. Label the vertex with minimum distance as **permanent**
3. Update the distances and predecessors to reachable **temporary** vertices from the current permanent vertex
4. Repeat steps 2 and 3 until all vertices visited.

Sensitivity: Internal

Set Up

v	Label	d_v	π_v
s	T	0	-
b	T		
c	T		
d	T		
e	T		
t	T		

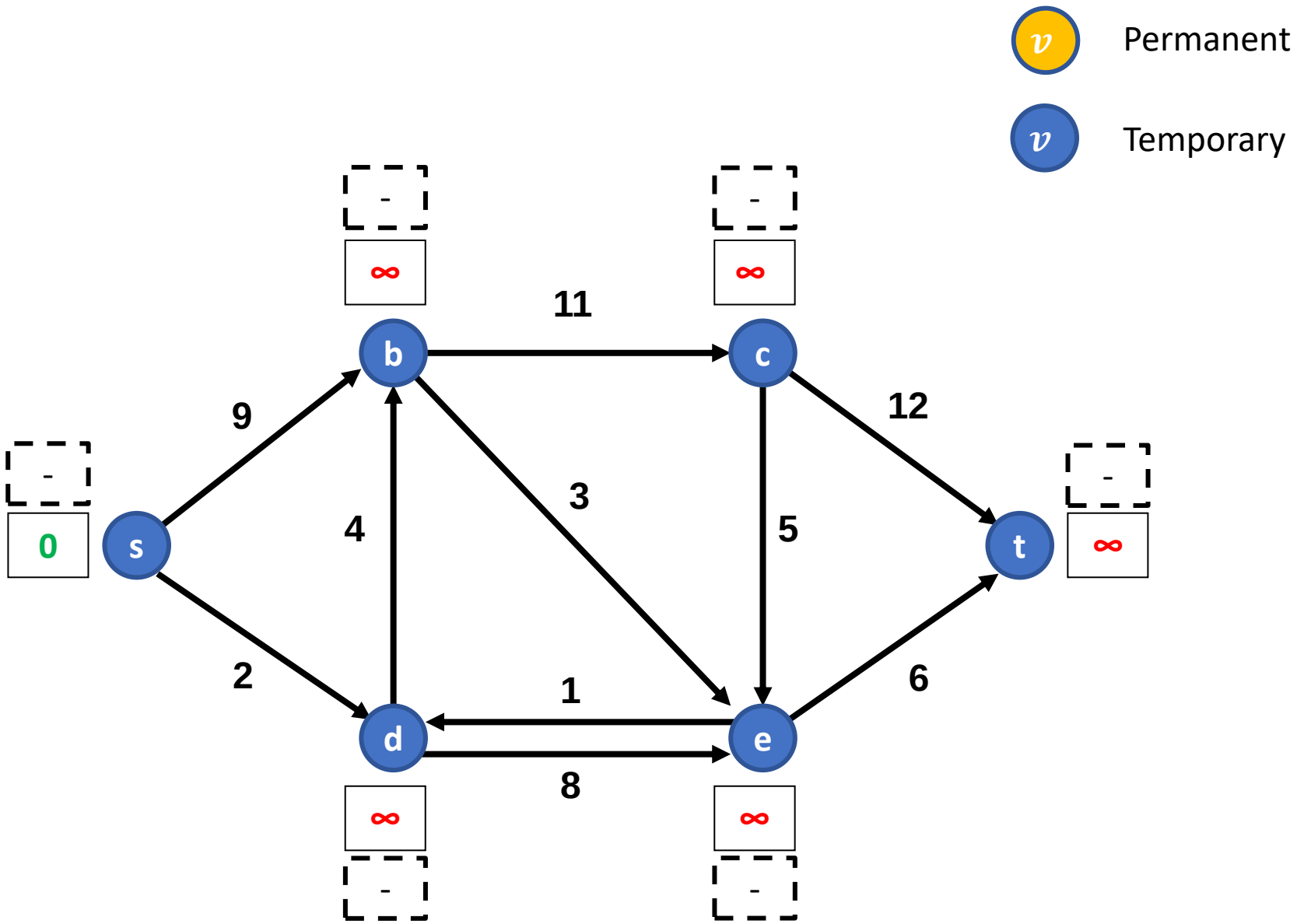

Initialise the network, source vertex has a distance of 0 and all other vertices a distance of ∞

Sensitivity: Internal

Improving Cost Labels

Imagine you know some path p from node s to node j that has a distance d_j

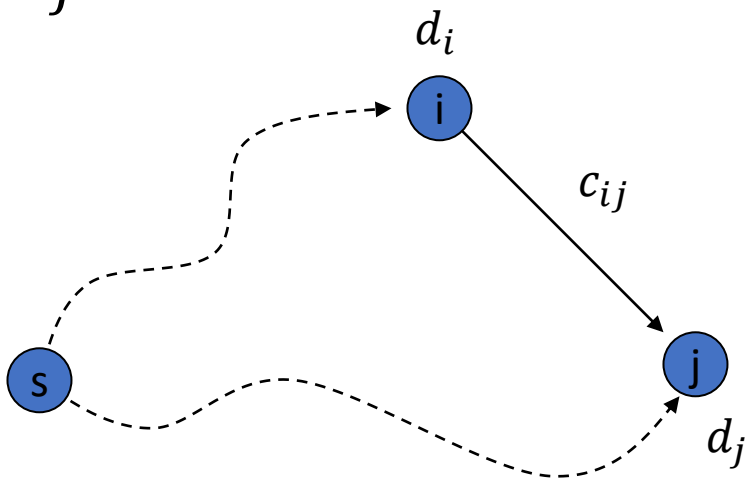

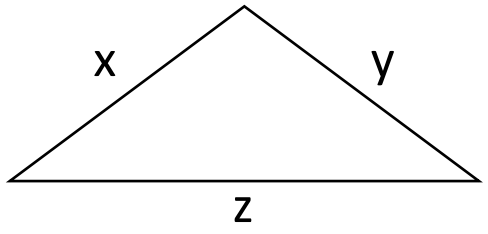

x + y ≥ z

- If this is not **TRUE** then there exists some path that improves d_j
  - E.g. The path to d_i + the edge (i, j)

Sensitivity: Internal

Example 1

Sensitivity: Internal

Dijkstra Example

v	Label	d_v	π_v
s	T	0	-
b	T		
c	T		
d	T		
e	T		
t	T		

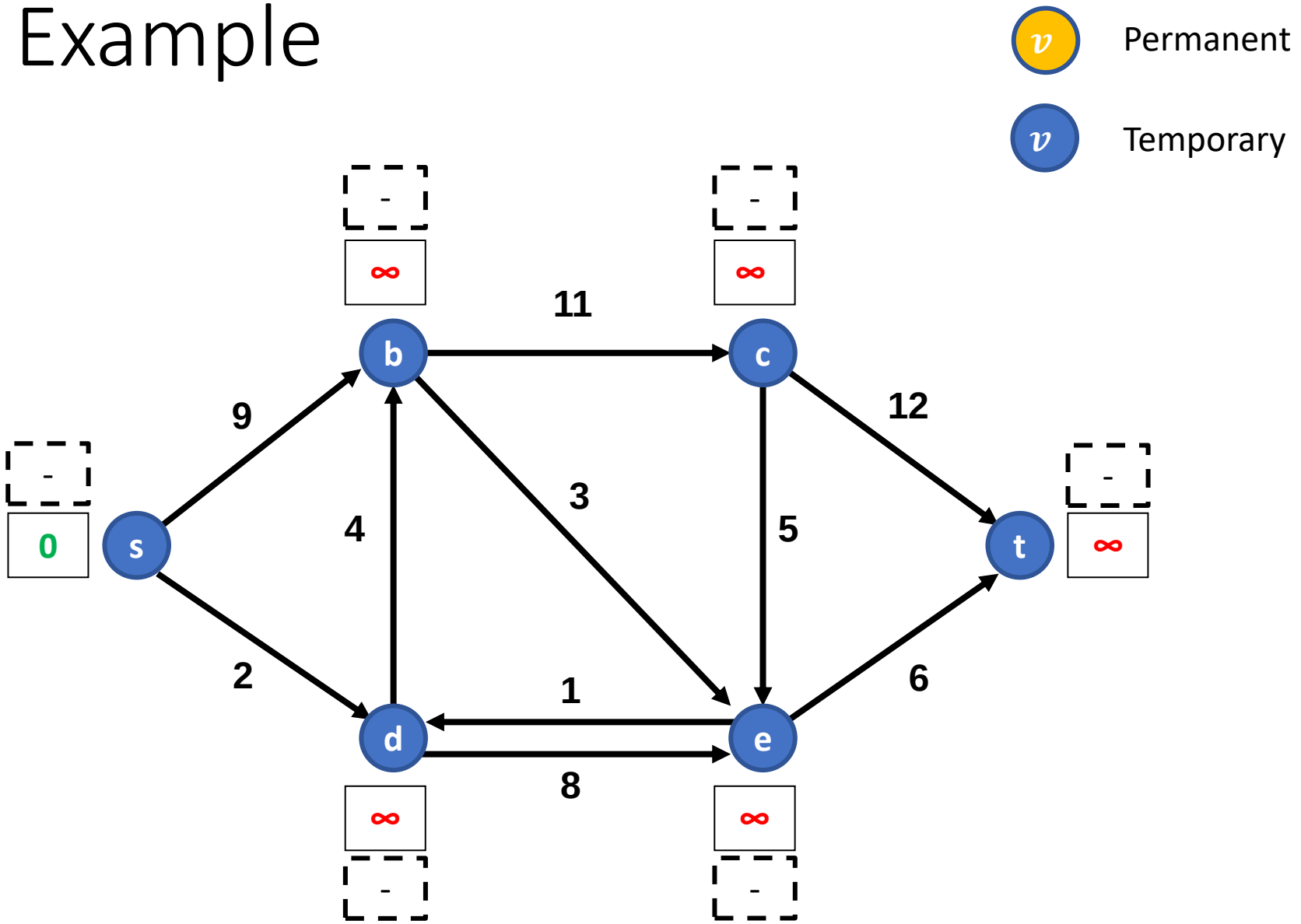

Initialise the network, source vertex has a distance of 0 and all other vertices a distance of ∞

Sensitivity: Internal

Example

v	Label	d_v	π_v
s	P	0	-
b	T		
c	T		
d	T		
e	T		
t	T		

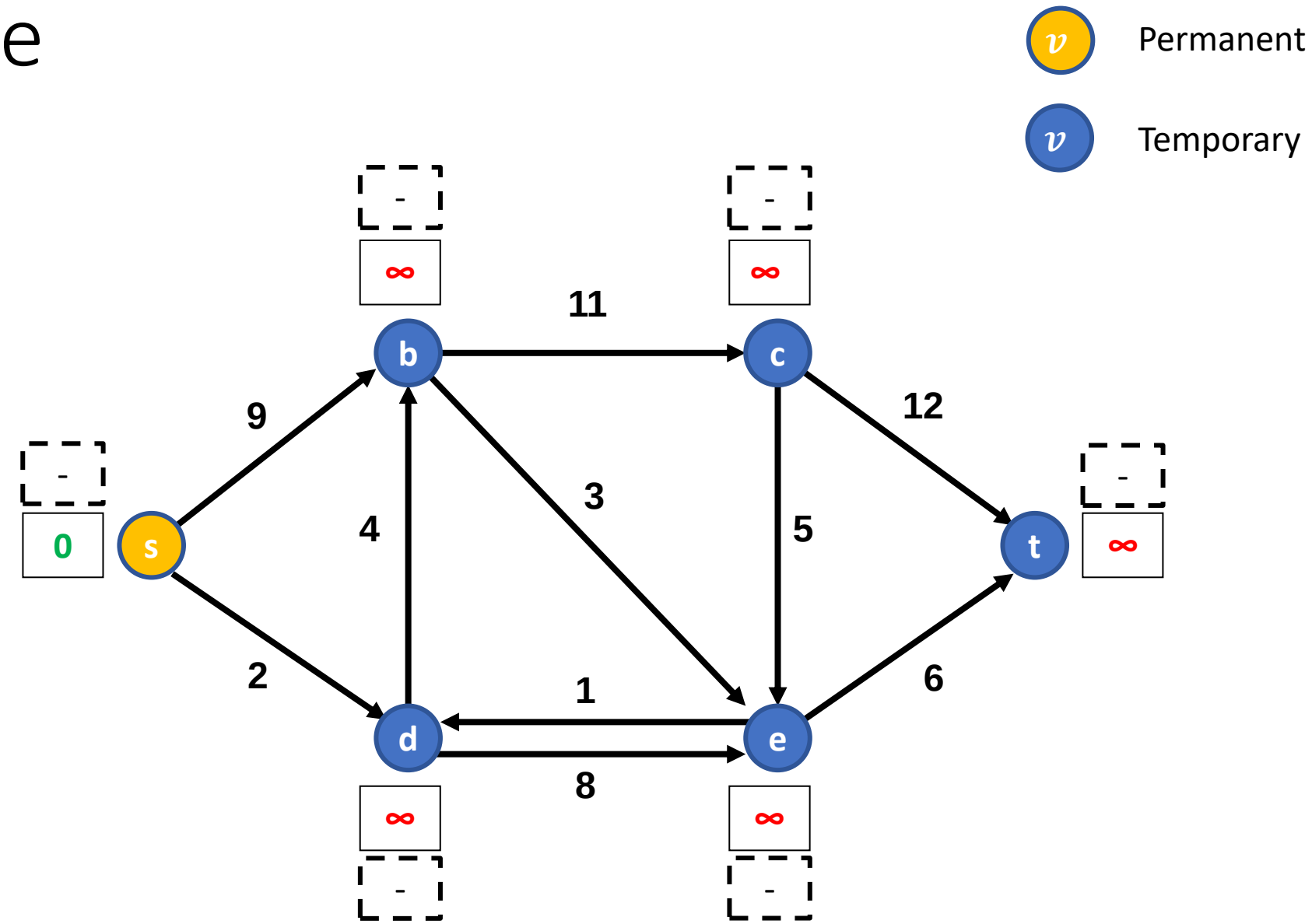

Label temporary vertex with minimum distance as permanent

Sensitivity: Internal

Example

v	Label	d_v	π_v
s	P	0	-
b	T	9	s
c	T		
d	T	2	s
e	T		
t	T		

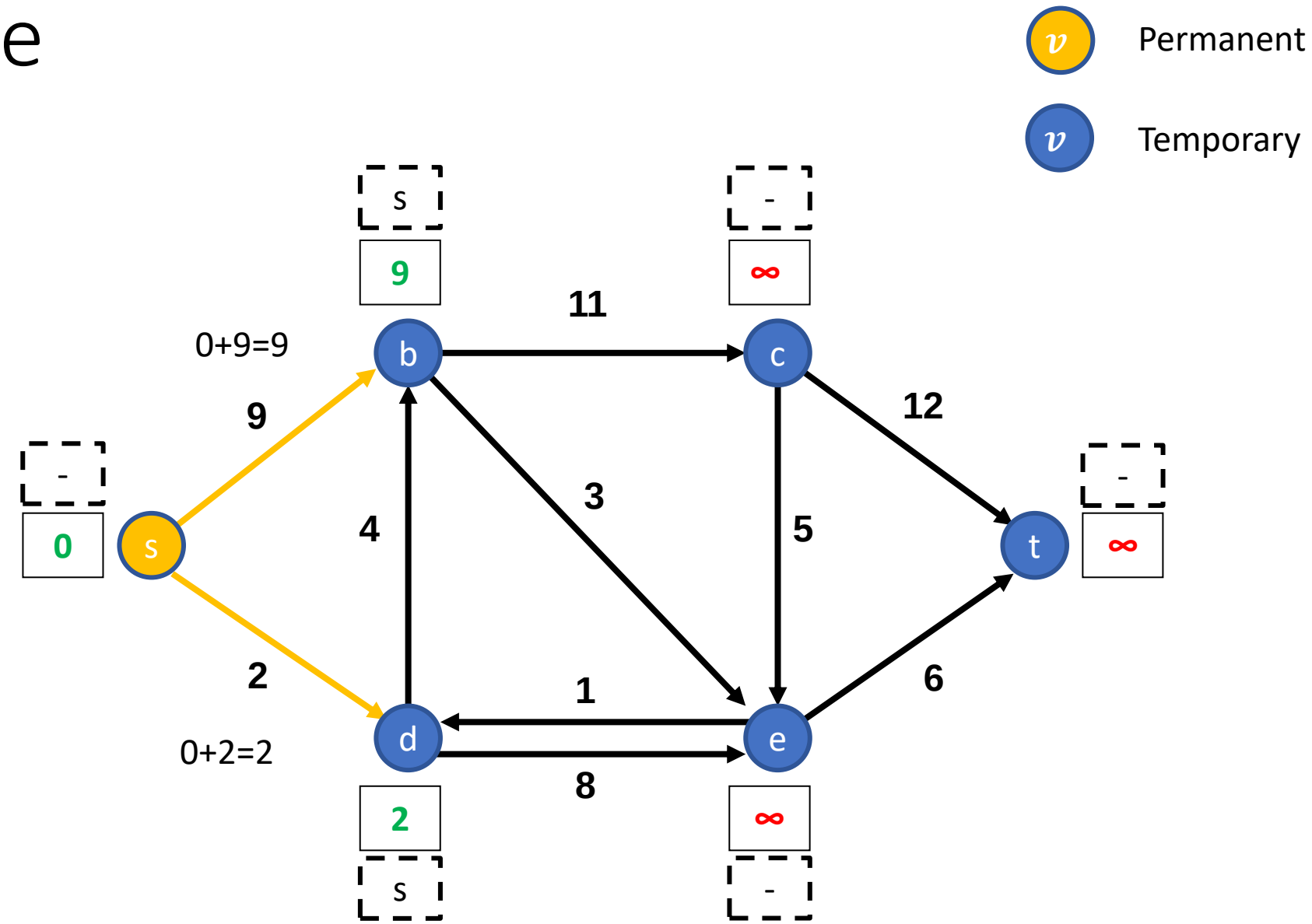

Update distances to reachable vertices which are labelled temporary

Sensitivity: Internal

Example

v	Label	d_v	π_v
s	P	0	-
b	T	9	s
c	T		
d	P	2	s
e	T		
t	T		

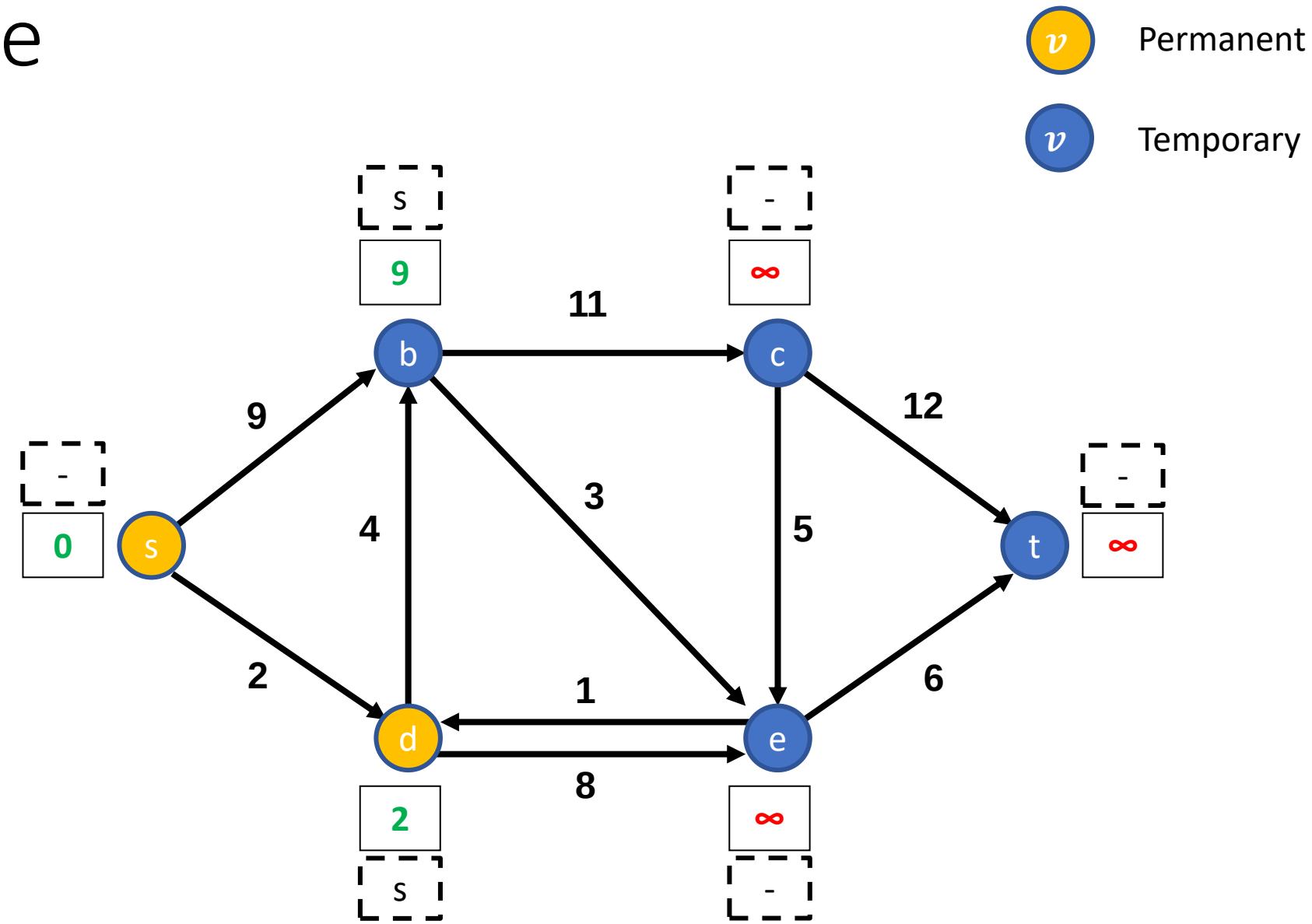

Label temporary vertex with minimum distance as permanent

Sensitivity: Internal

Example

v	Label	d_v	π_v
s	P	0	-
b	T	~~9~~ 6	~~s~~ d
c	T		
d	P	2	s
e	T	10	d
t	T		

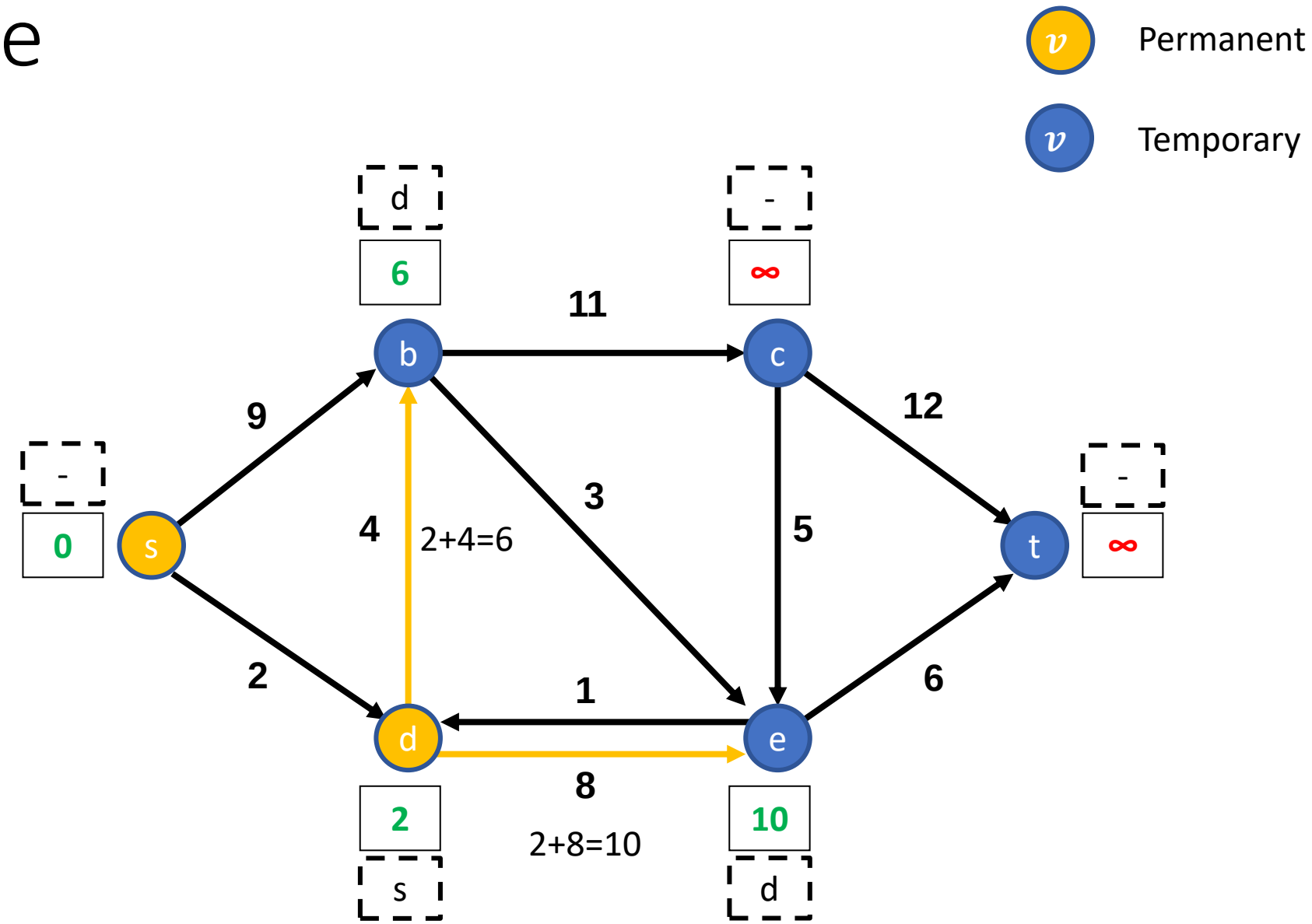

Update distances to reachable vertices which are labelled temporary

Sensitivity: Internal

Example

v	Label	d_v	π_v
s	P	0	-
b	P	~~9~~ 6	~~s~~ d
c	T		
d	P	2	s
e	T	10	d
t	T		

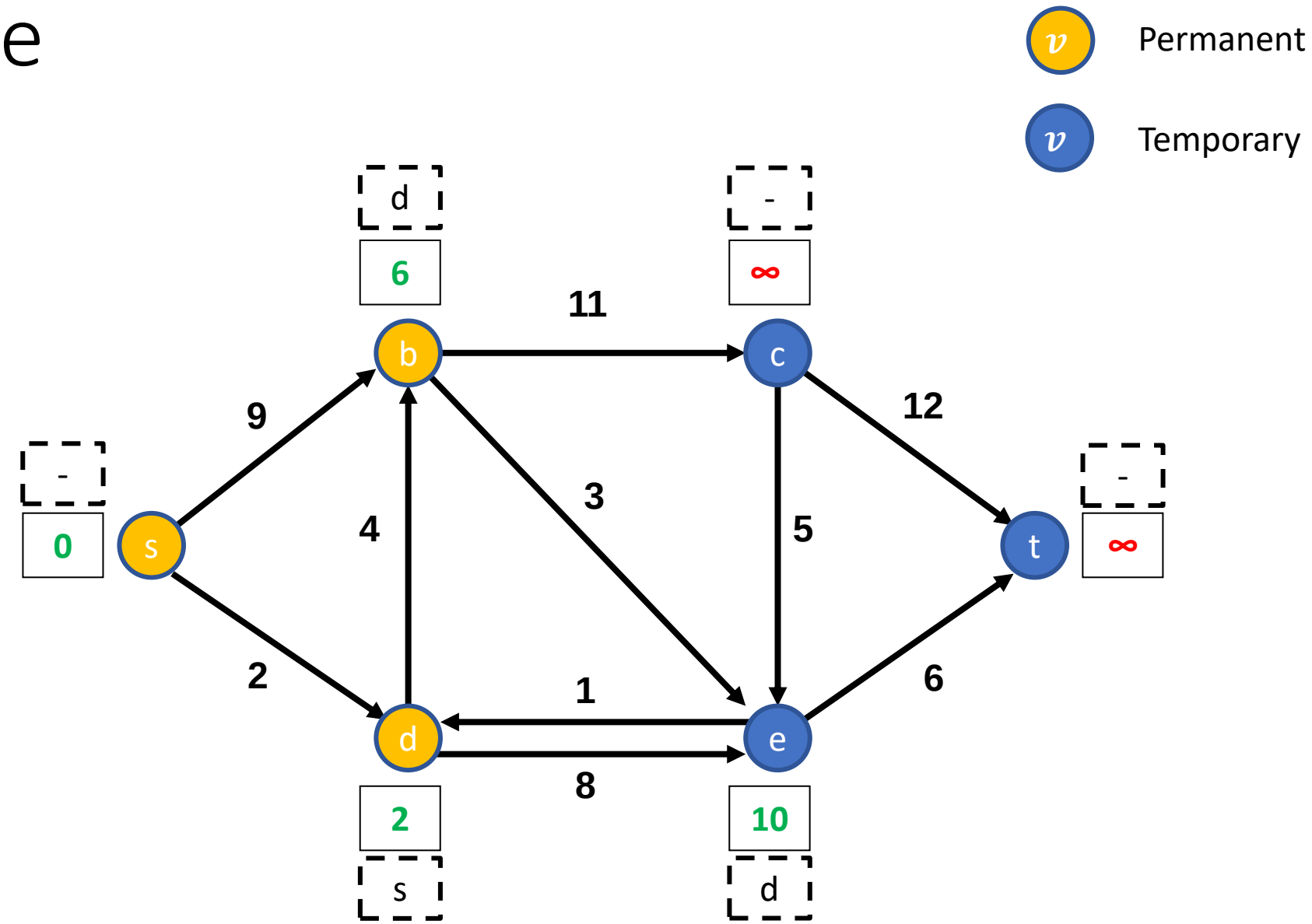

Label temporary vertex with minimum distance as permanent

Sensitivity: Internal

Example

v	Label	d_v	π_v
s	P	0	-
b	P	~~9~~ 6	~~s~~ d
c	T	17	b
d	P	2	s
e	T	~~10~~ 9	~~d~~ b
t	T		

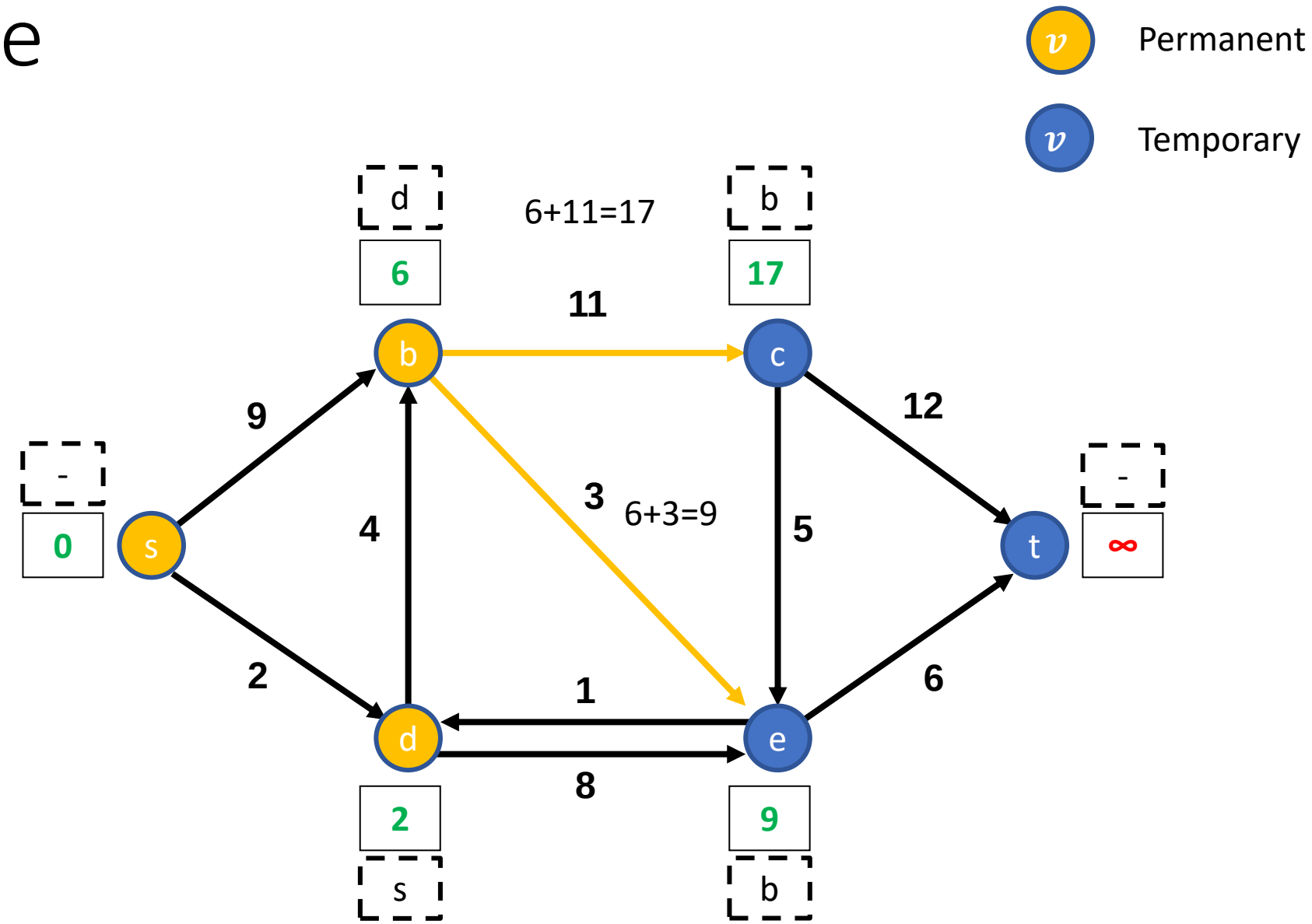

Update distances to reachable vertices which are labelled temporary

Sensitivity: Internal

Example

v	Label	d_v	π_v
s	P	0	-
b	P	~~9~~ 6	~~s~~ d
c	T	17	b
d	P	2	s
e	P	~~10~~ 9	~~d~~ b
t	T		

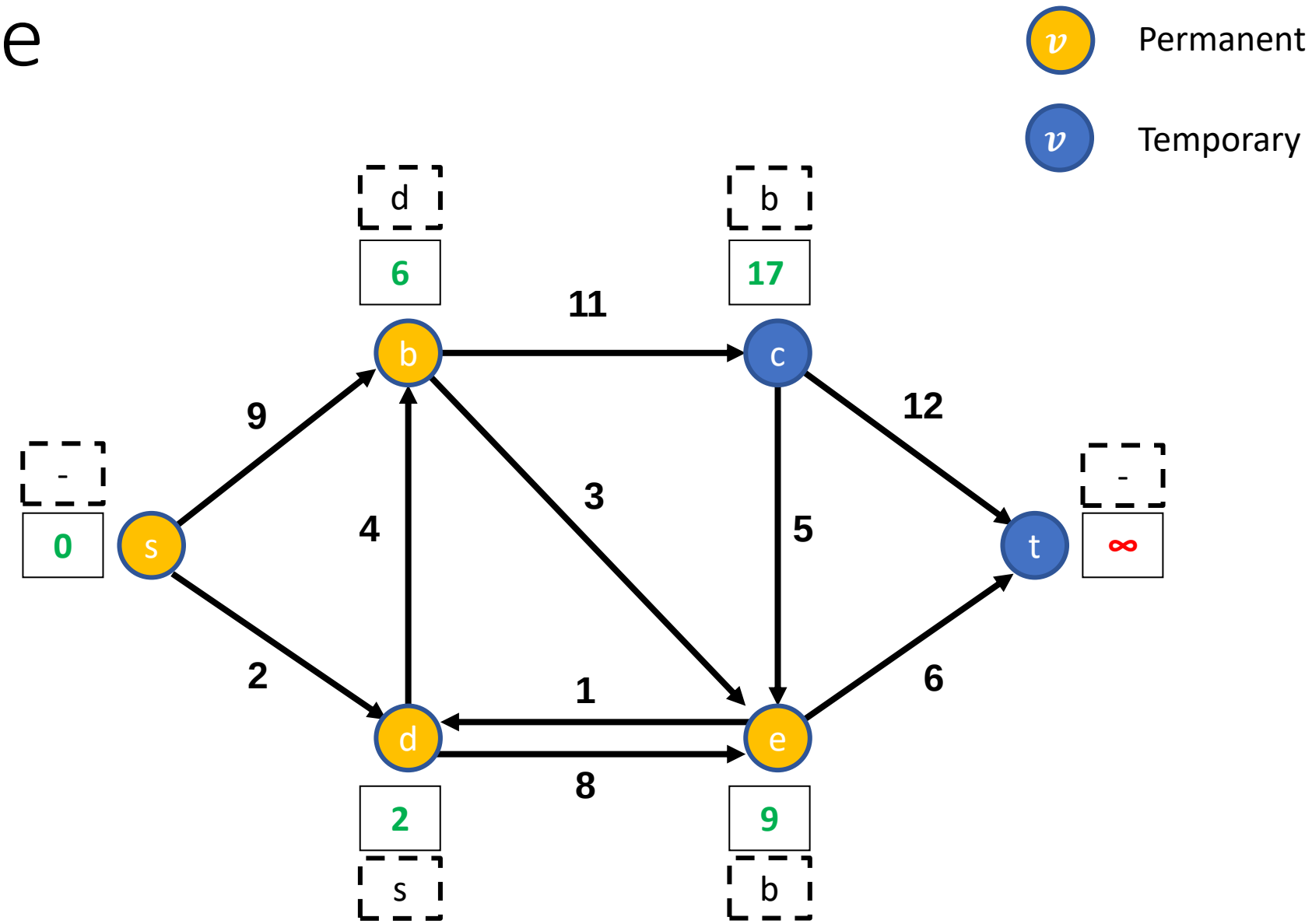

Label temporary vertex with minimum distance as permanent

Sensitivity: Internal

Example

v	Label	d_v	π_v
s	P	0	-
b	P	~~9~~ 6	~~s~~ d
c	T	17	b
d	P	2	s
e	P	~~10~~ 9	~~d~~ b
t	T	15	e

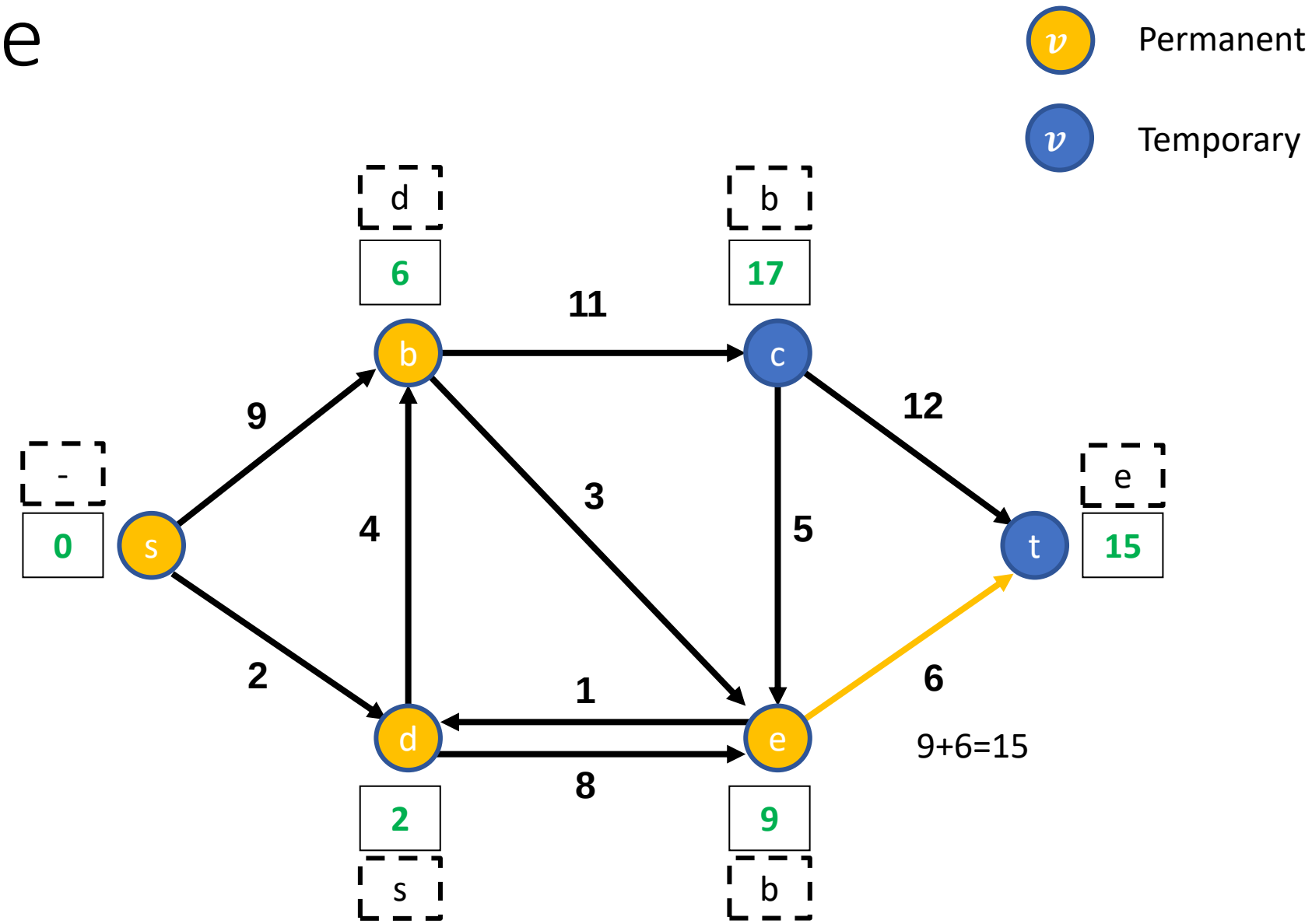

Update distances to reachable vertices which are labelled temporary

Sensitivity: Internal

Example

v	Label	d_v	π_v
s	P	0	-
b	P	~~9~~ 6	~~s~~ d
c	T	17	b
d	P	2	s
e	P	~~10~~ 9	~~d~~ b
t	P	15	e

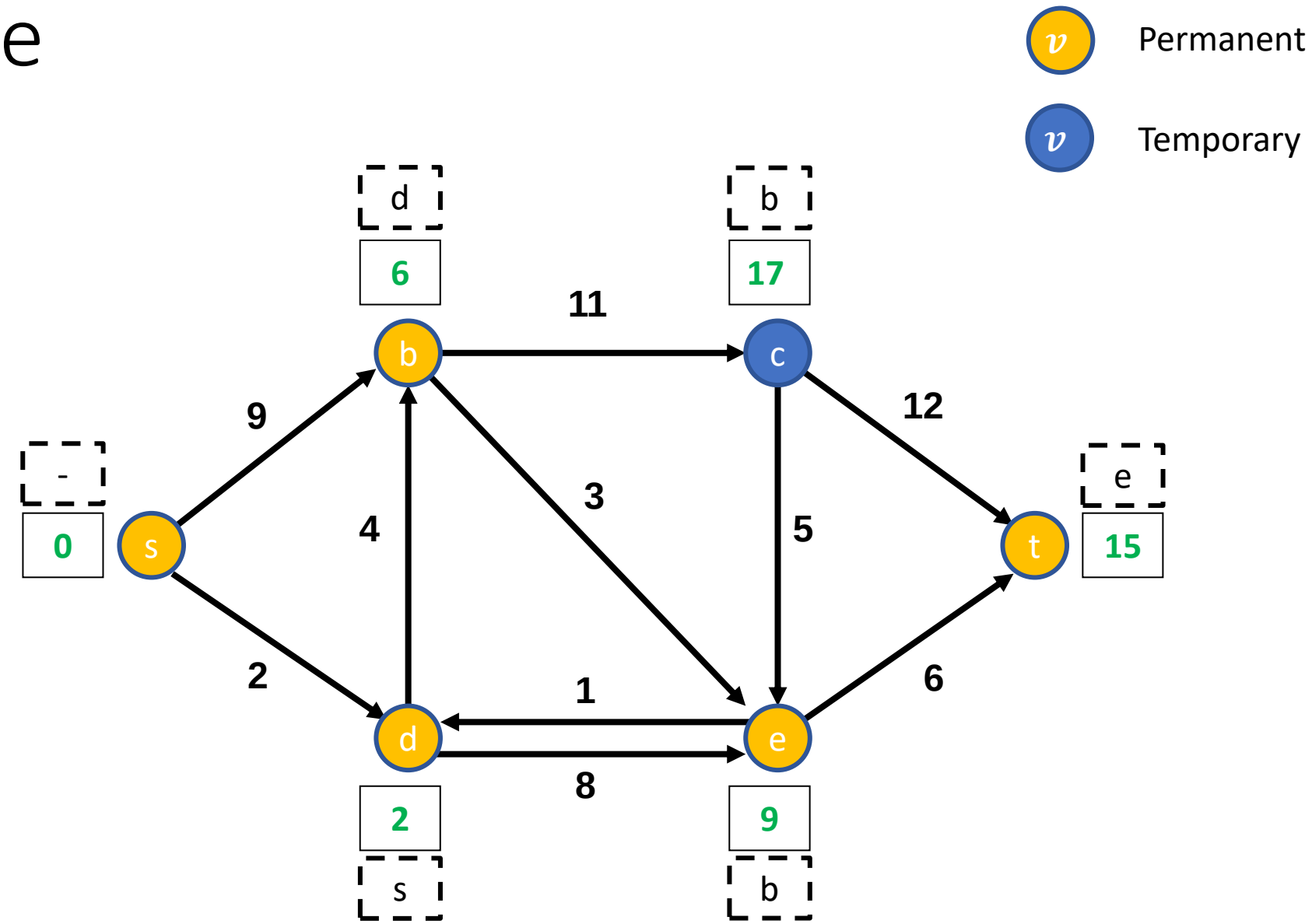

Label temporary vertex with minimum distance as permanent

Sensitivity: Internal

Example

v	Label	d_v	π_v
s	P	0	-
b	P	~~9~~ 6	~~s~~ d
c	T	17	b
d	P	2	s
e	P	~~10~~ 9	~~d~~ b
t	P	15	e

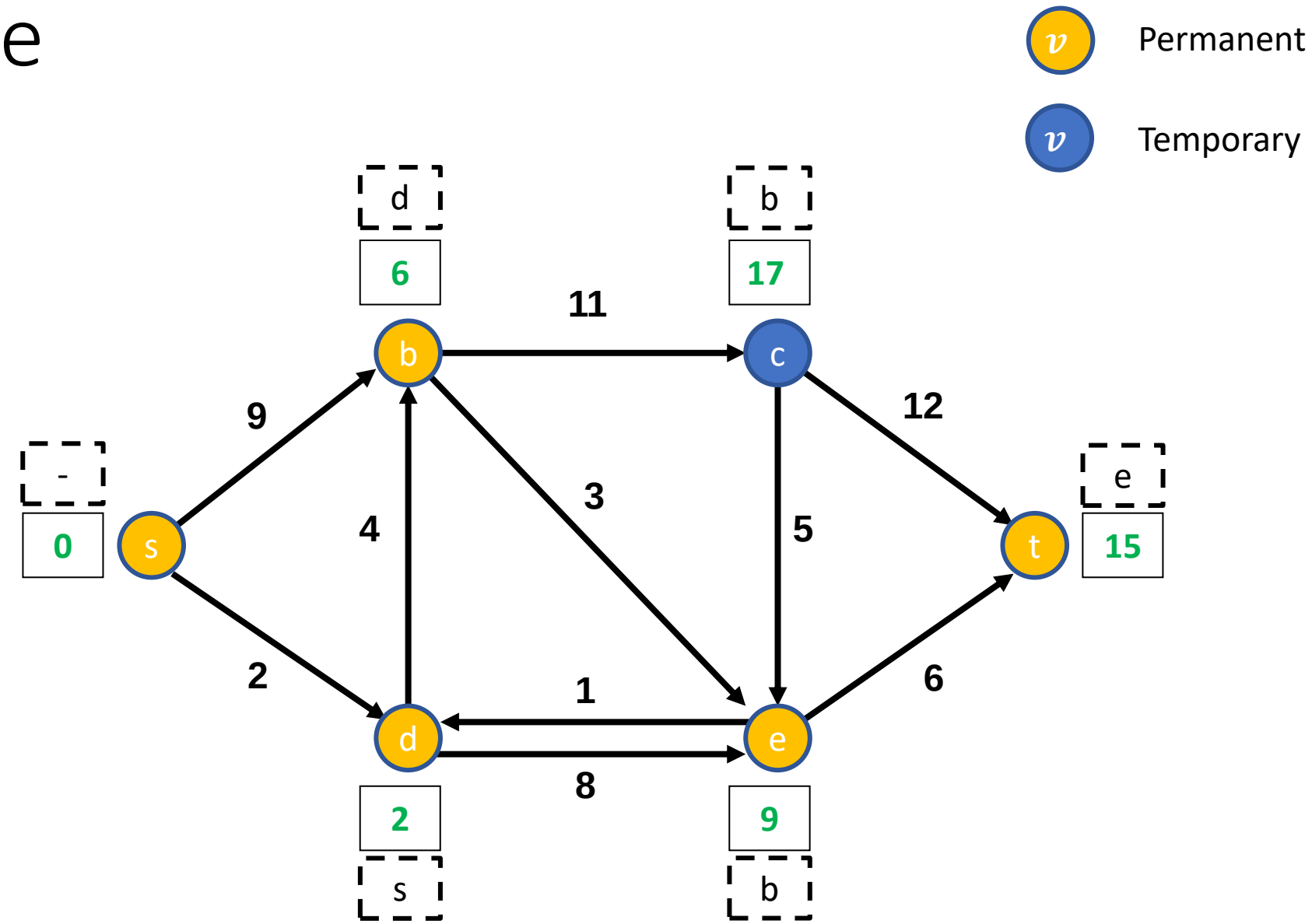

Update distances to reachable vertices which are labelled temporary. No changes

Sensitivity: Internal

Example

v	Label	d_v	π_v
s	P	0	-
b	P	~~9~~ 6	~~s~~ d
c	P	17	b
d	P	2	s
e	P	~~10~~ 9	~~d~~ b
t	P	15	e

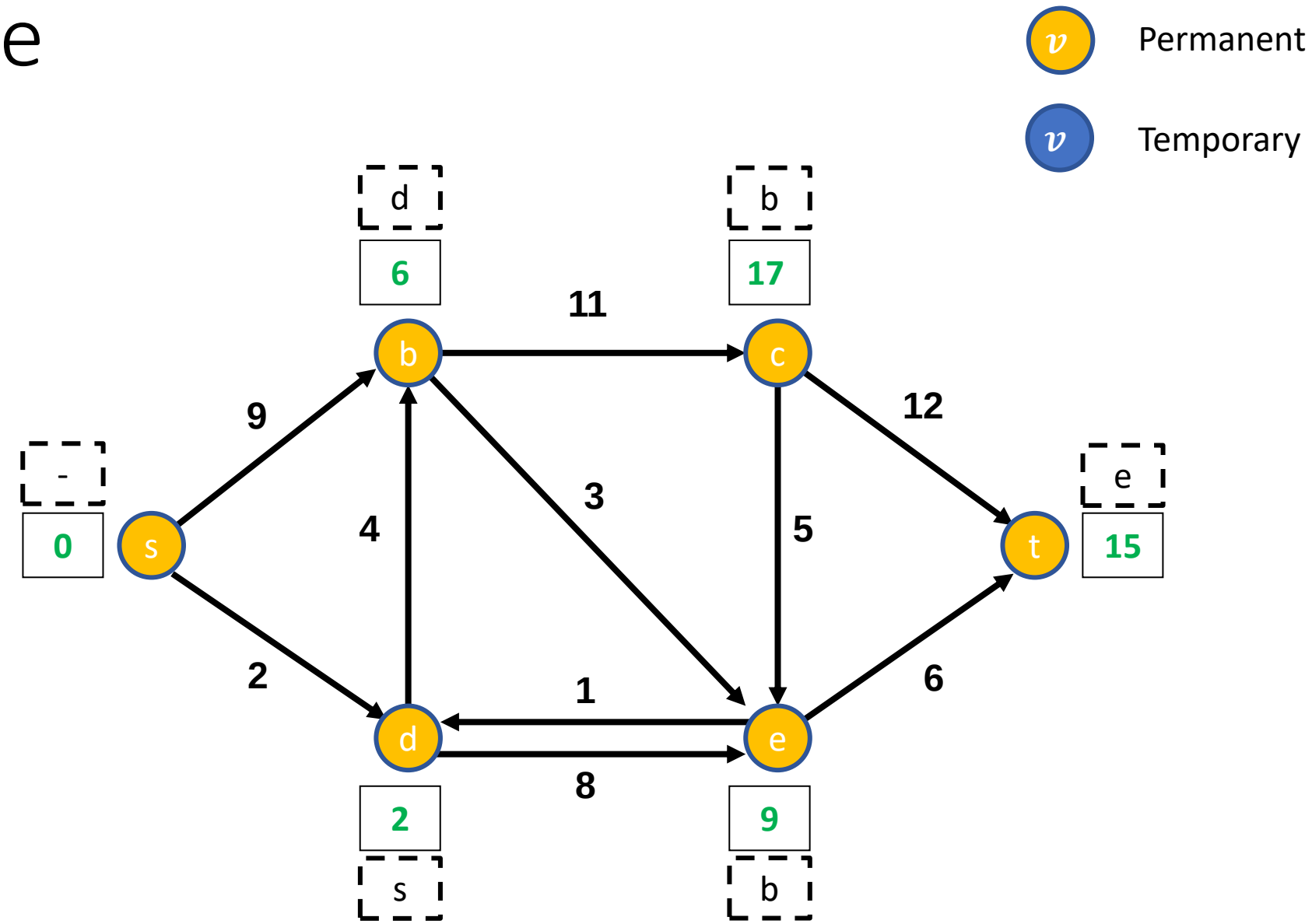

Label temporary vertex with minimum distance as permanent

Sensitivity: Internal

Example

v	Label	d_v	π_v
s	P	0	-
b	P	~~9~~ 6	~~s~~ d
c	P	17	b
d	P	2	s
e	P	~~10~~ 9	~~d~~ b
t	P	15	e

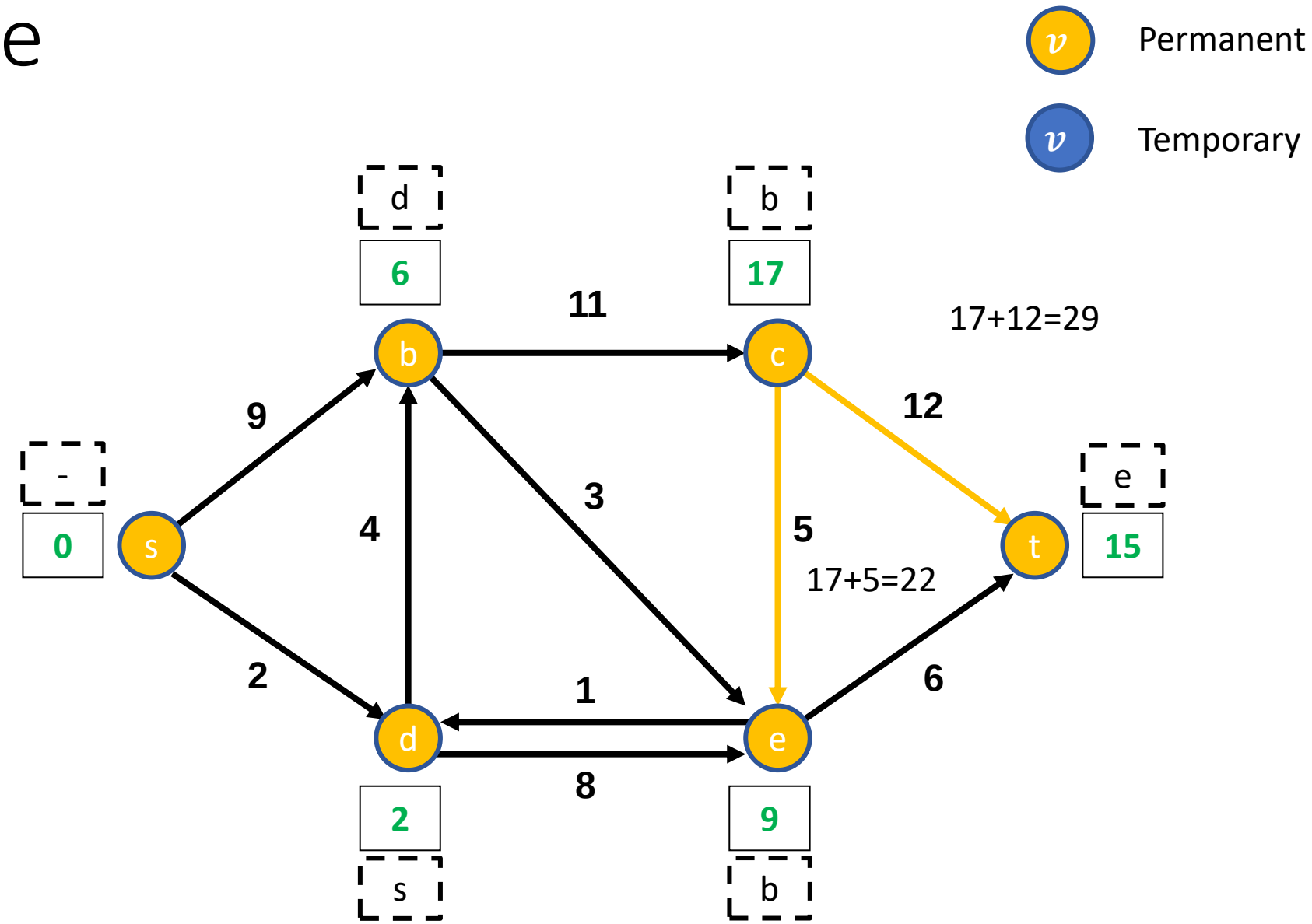

Update distances to reachable vertices which are labelled temporary. No changes

Sensitivity: Internal

Example

v	Label	d_v	π_v
s	P	0	-
b	P	~~9~~ 6	~~s~~ d
c	P	17	b
d	P	2	s
e	P	~~10~~ 9	~~d~~ b
t	P	15	e

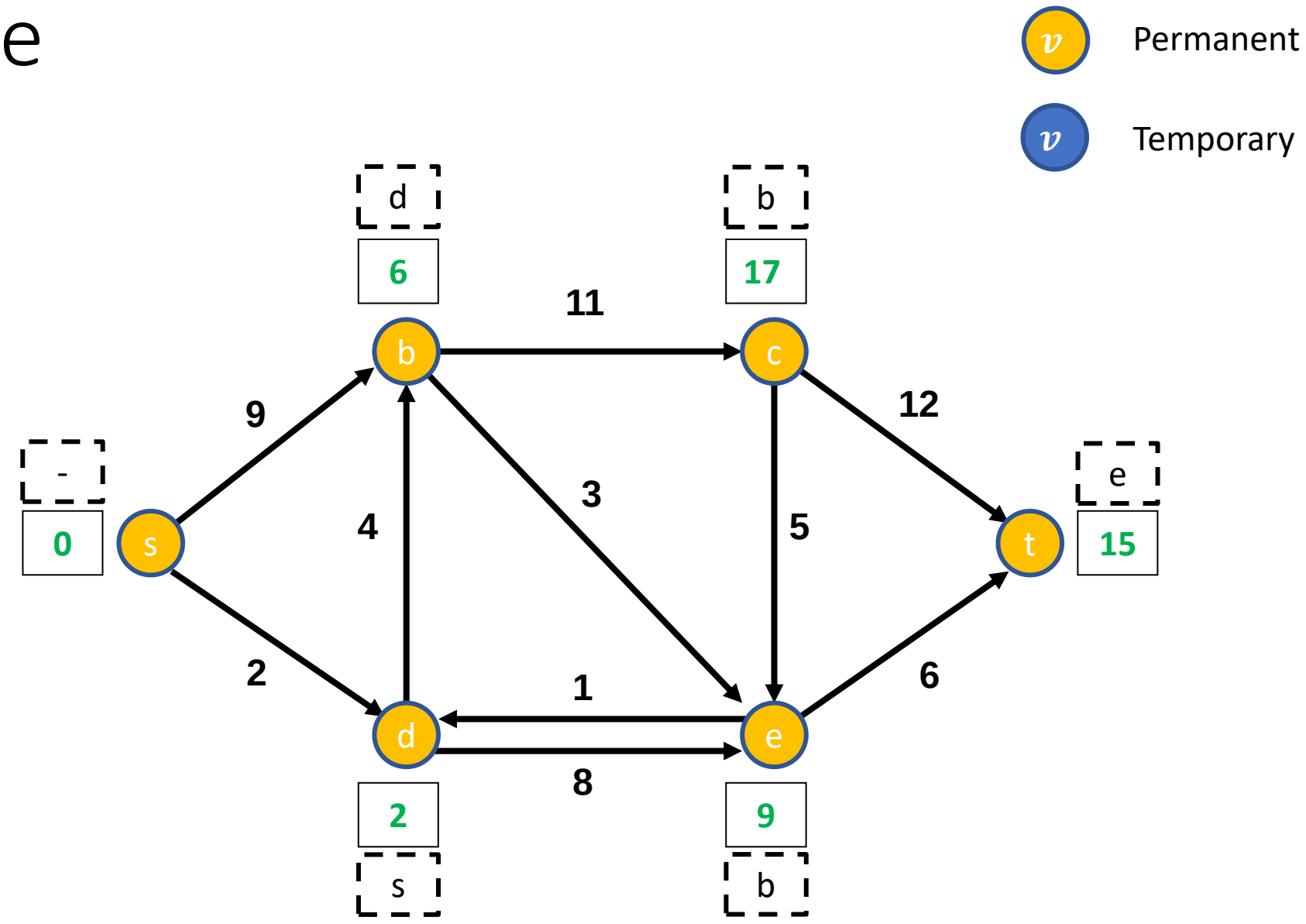

Final Network and Table

Sensitivity: Internal

Example

v	Label	d_v	π_v
s	P	0	-
b	P	~~9~~ 6	~~s~~ d
c	P	17	b
d	P	2	s
e	P	~~10~~ 9	~~d~~ b
t	P	15	e

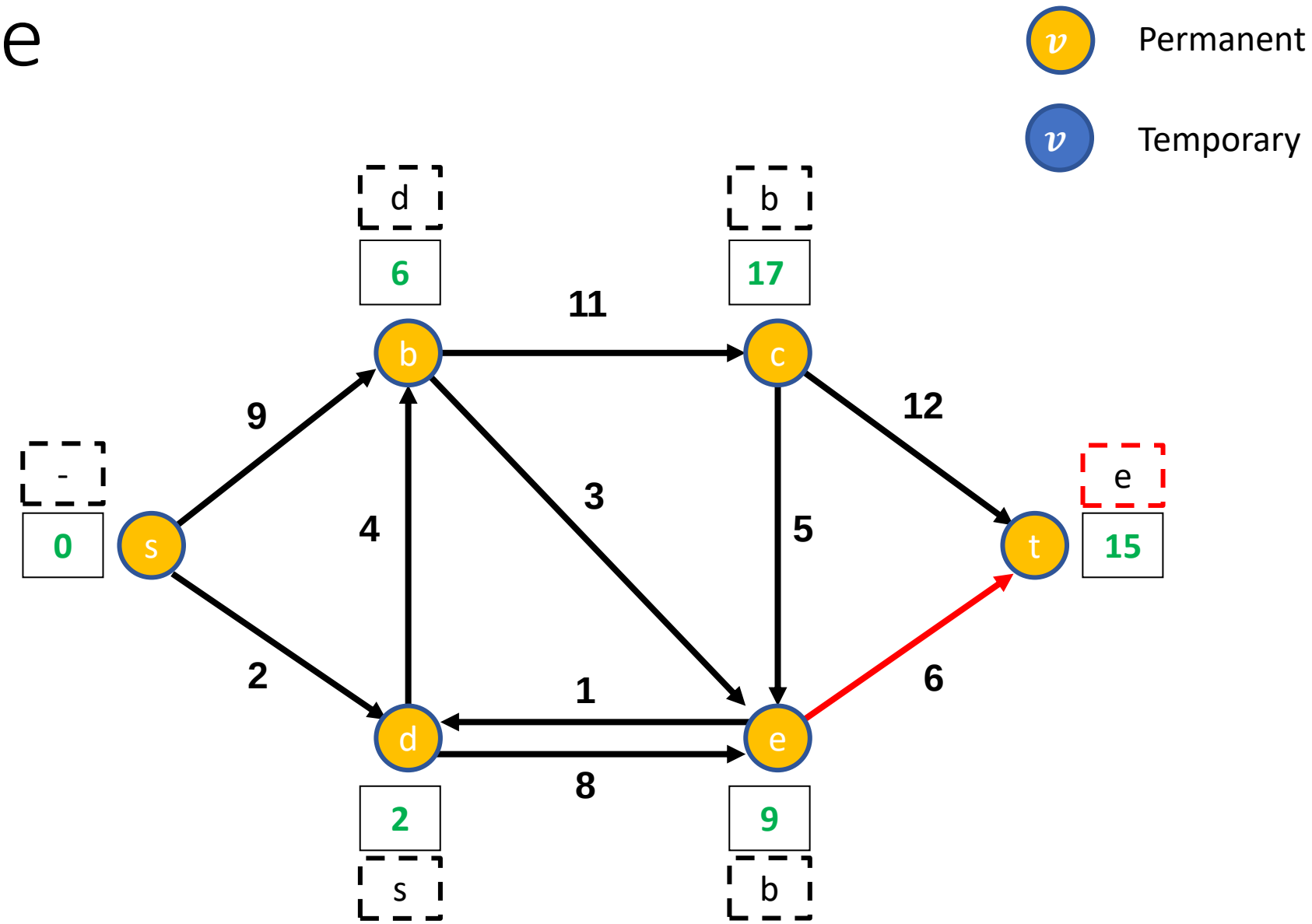

To compute the shortest path, work backwards from the source along the predecessor

Sensitivity: Internal

Example

v	Label	d_v	π_v
s	P	0	-
b	P	~~9~~ 6	~~s~~ d
c	P	17	b
d	P	2	s
e	P	~~10~~ 9	~~d~~ b
t	P	15	e

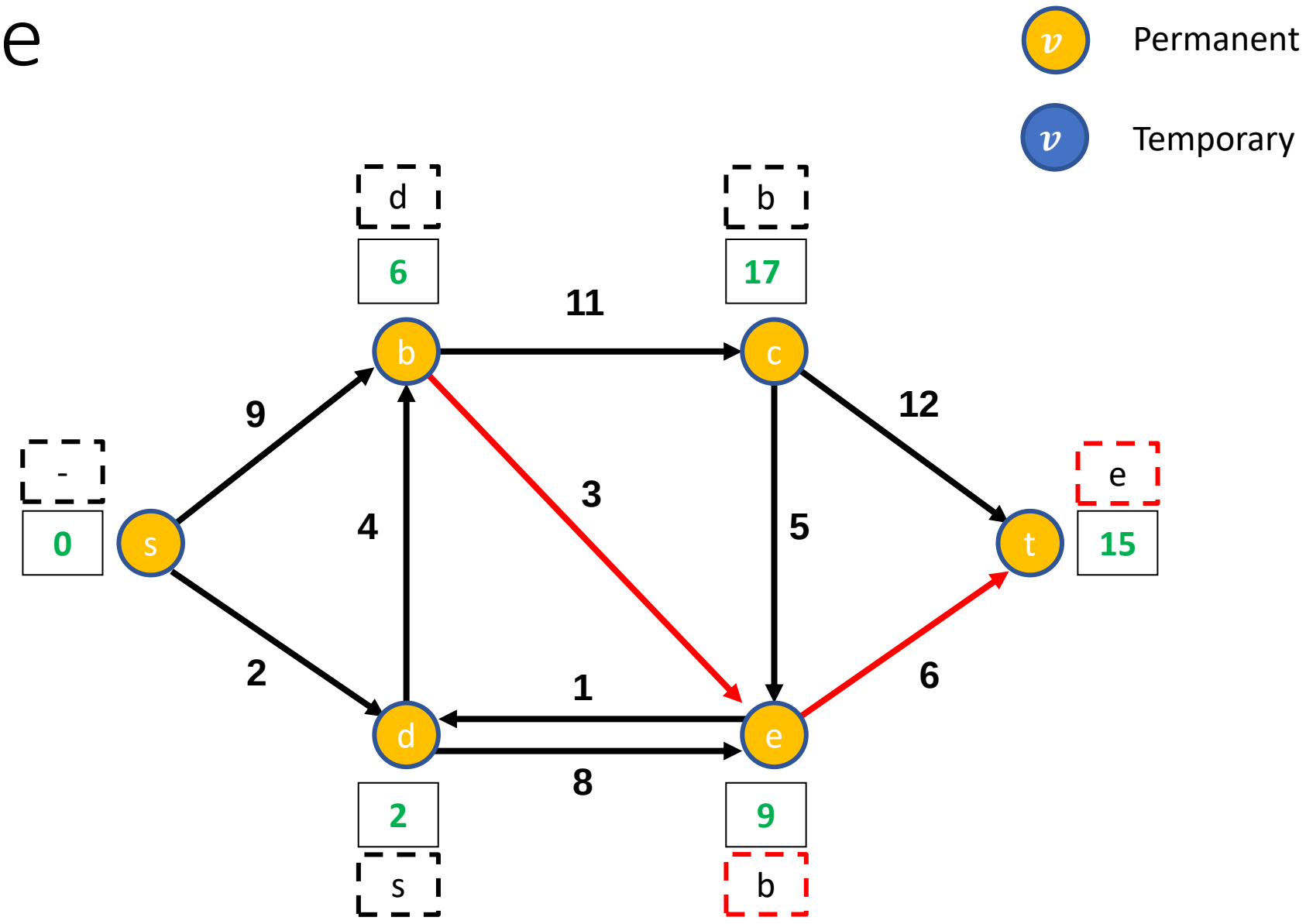

To compute the shortest path, work backwards from the source along the predecessor

Sensitivity: Internal

Example

v	Label	d_v	π_v
s	P	0	-
b	P	~~9~~ 6	~~s~~ d
c	P	17	b
d	P	2	s
e	P	~~10~~ 9	~~d~~ b
t	P	15	e

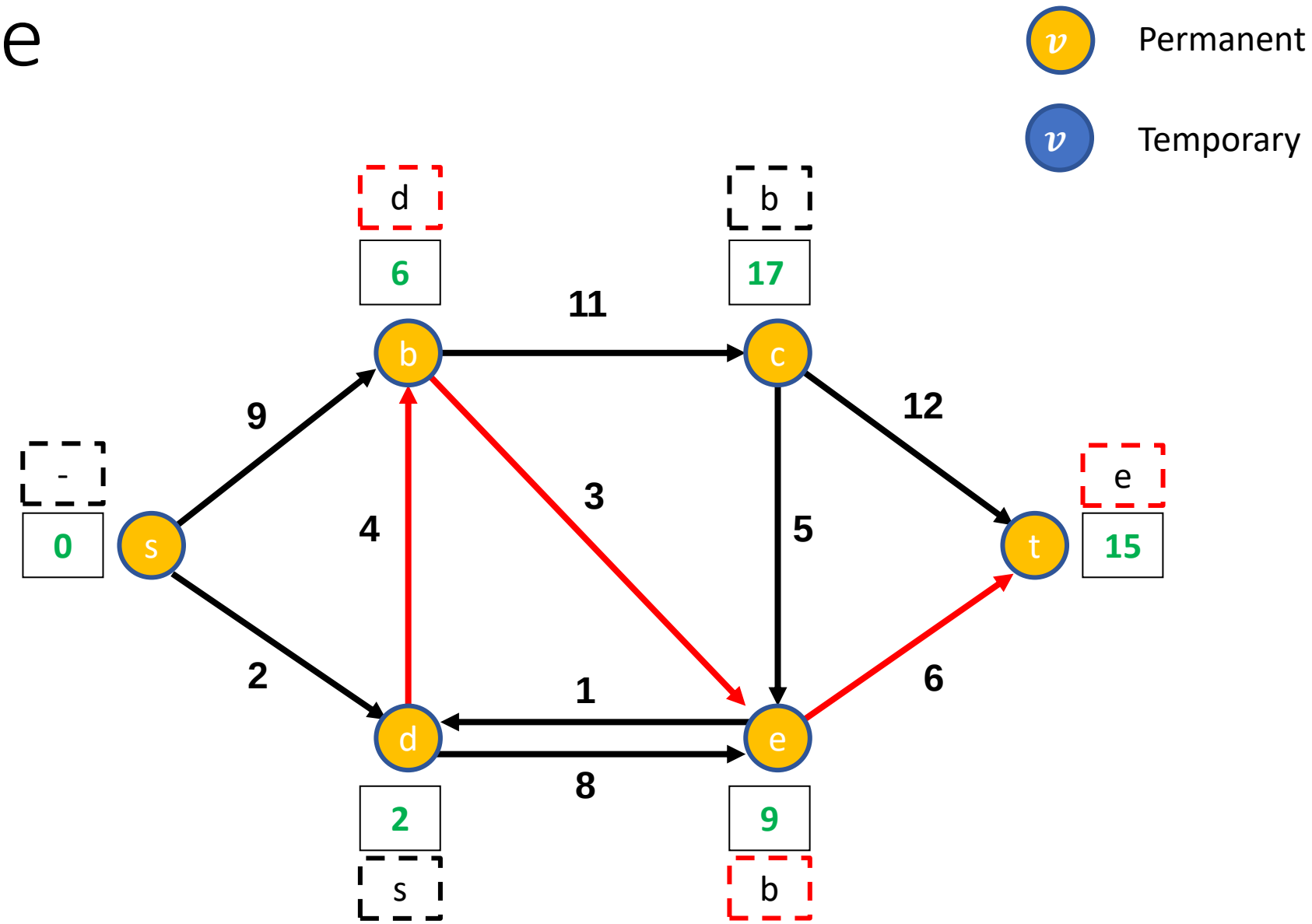

To compute the shortest path, work backwards from the source along the predecessor

Sensitivity: Internal

Example

v	Label	d_v	π_v
s	P	0	-
b	P	~~9~~ 6	~~s~~ d
c	P	17	b
d	P	2	s
e	P	~~10~~ 9	~~d~~ b
t	P	15	e

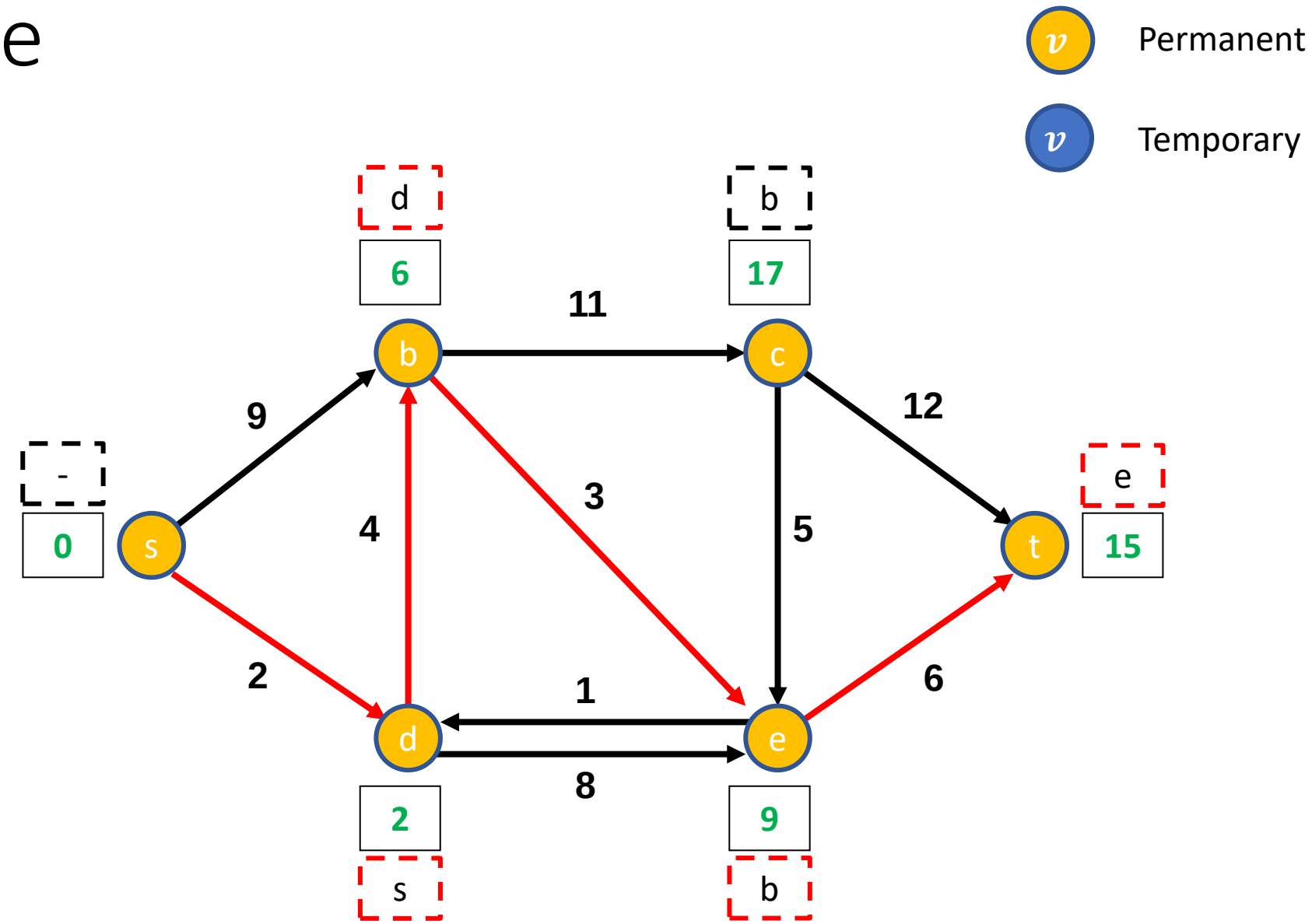

To compute the shortest path, work backwards from the source along the predecessor

Sensitivity: Internal

Example

v	Label	d_v	π_v
s	P	0	-
b	P	~~9~~ 6	~~s~~ d
c	P	17	b
d	P	2	s
e	P	~~10~~ 9	~~d~~ b
t	P	15	e

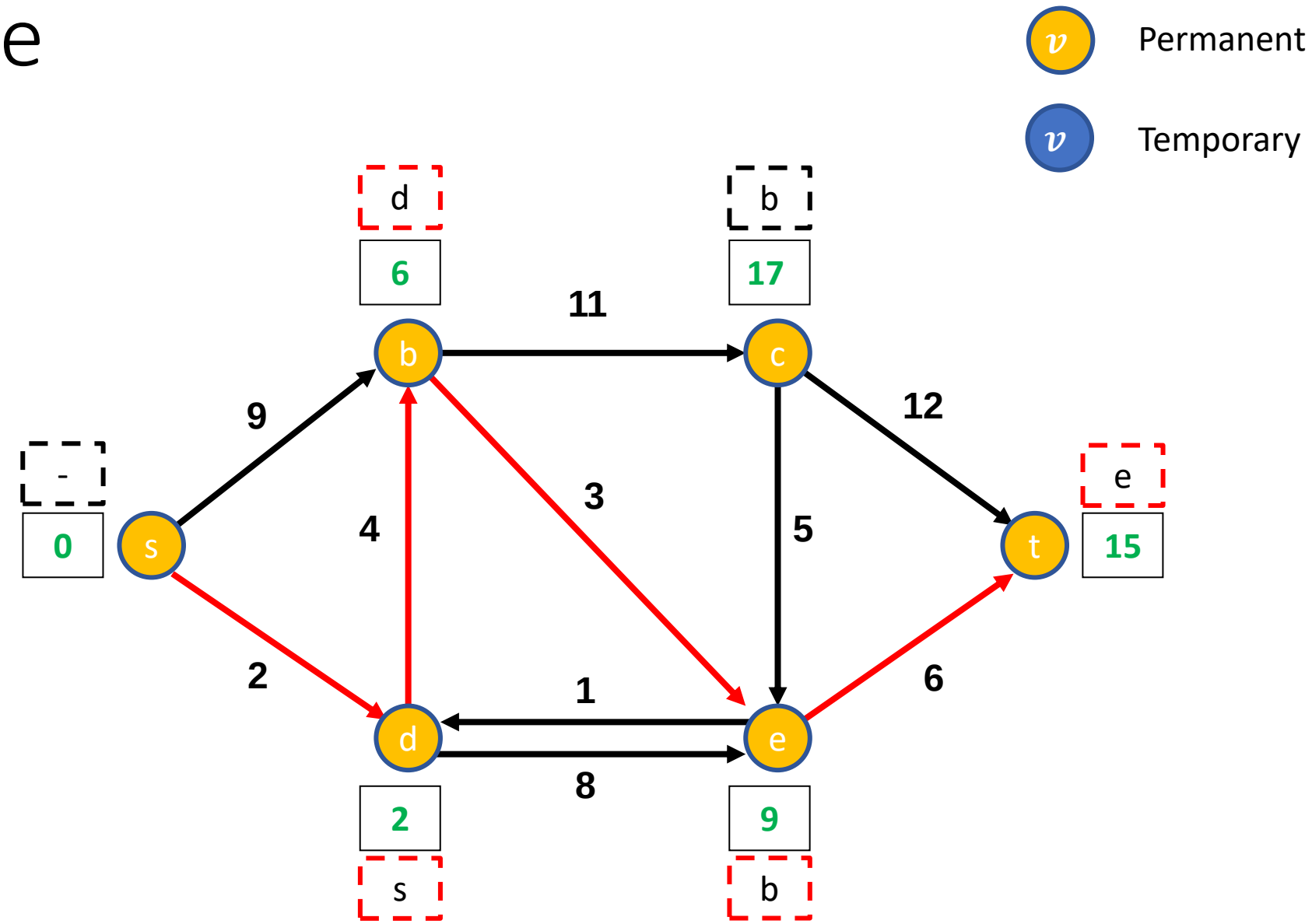

Shortest path from s to t is $s - d - b - e - t$ with a path length of 15

Sensitivity: Internal

Correctness

Visits all vertices in increasing order of distance and visits each vertex exactly once.

Dijkstra maintains a set of visited vertices (permanent) and unvisited vertices (temporary).

Claim: For a visited vertex v, d_v and π_v will be the optimal shortest path distance and corresponding predecessor vertex.

Meaning, we get all the shortest paths from the source to all visited vertices free!

Sensitivity: Internal

Shortest sub-path

v	Label	d_v	π_v
s	P	0	-
b	P	~~9~~ 6	~~s~~ d
c	P	17	b
d	P	2	s
e	P	~~10~~ 9	~~d~~ b
t	P	15	e

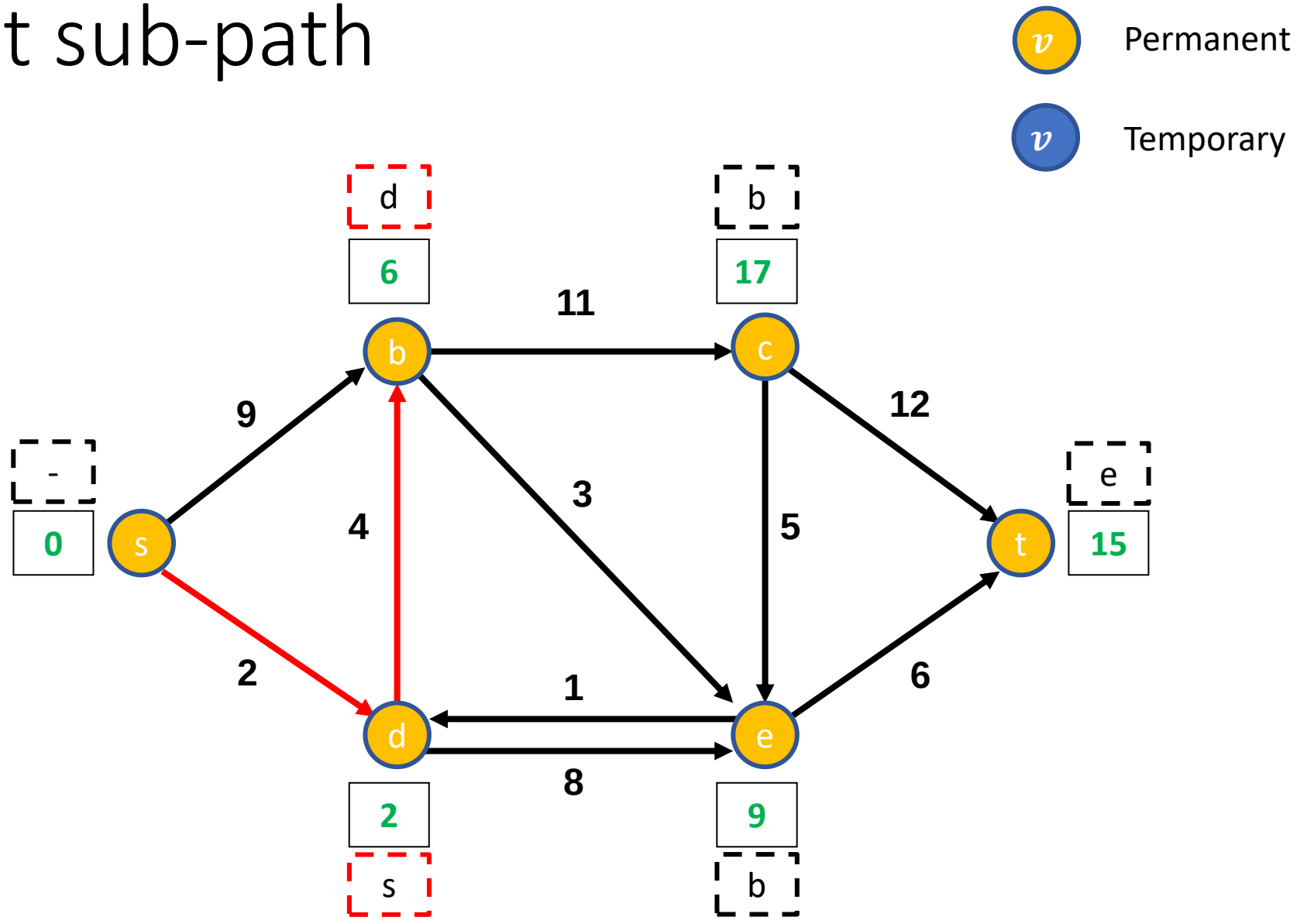

For example the shortest path from vertex s to b is $s - d - b$ of length 6

Sensitivity: Internal

Example 2

Sensitivity: Internal

Dijkstra Example 2

v	Label	d_v	π_v
s	T	0	-
b	T		
c	T		
d	T		
e	T		
t	T		

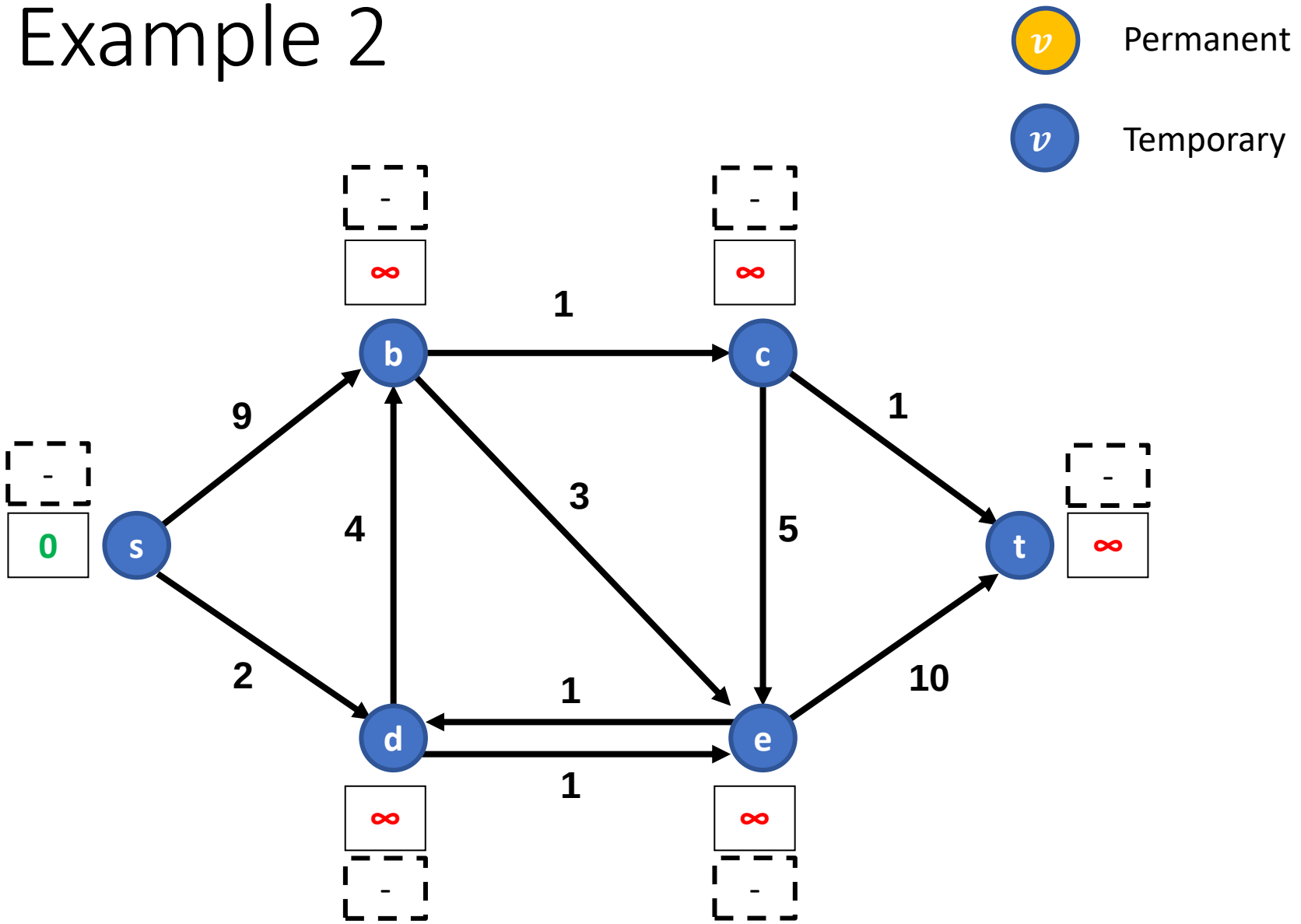

Initialise the network, source vertex has a distance of 0 and all other vertices a distance of ∞

Sensitivity: Internal

Example 2

v	Label	d_v	π_v
s	P	0	-
b	T		
c	T		
d	T		
e	T		
t	T		

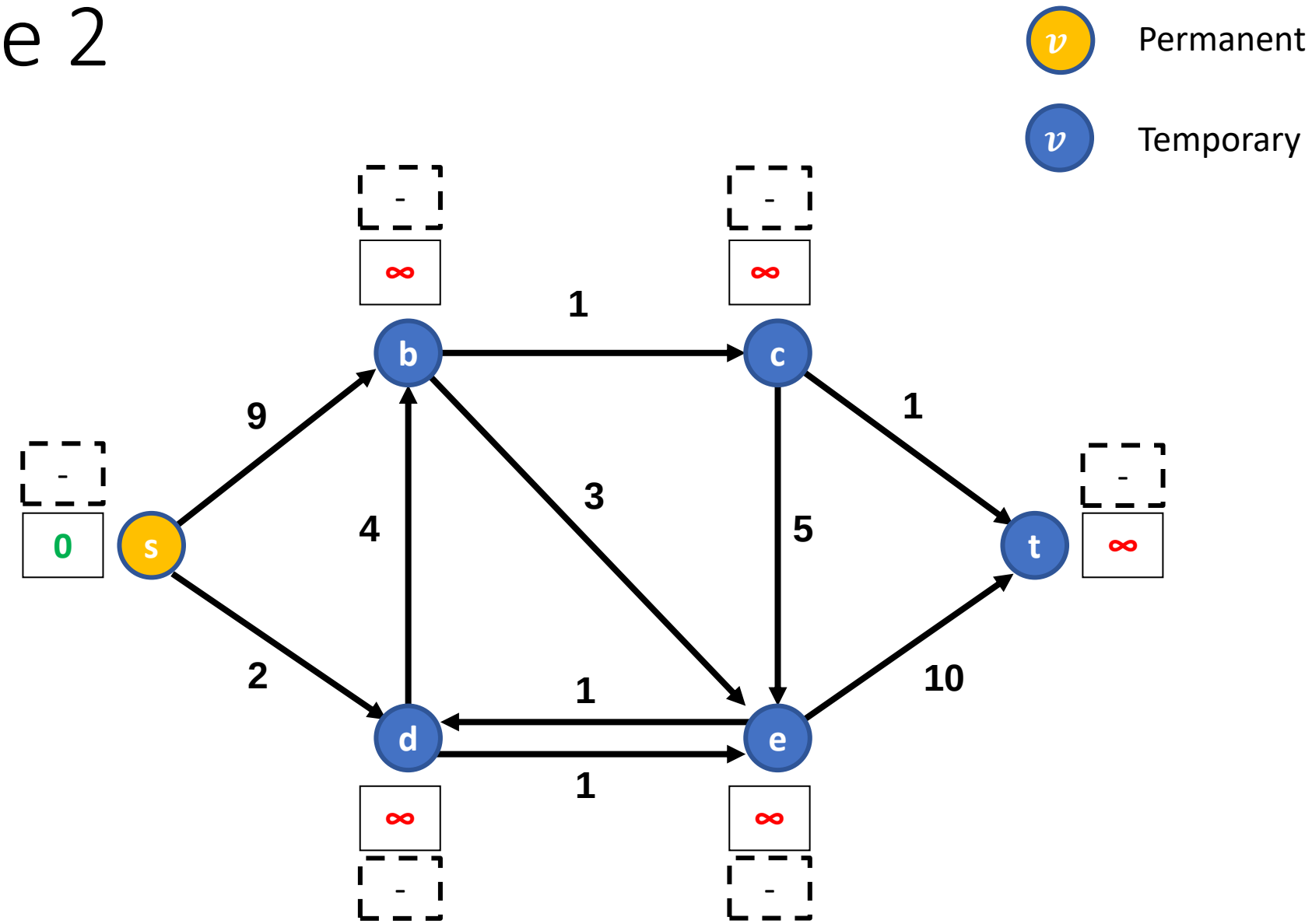

Label temporary vertex with minimum distance as permanent

Sensitivity: Internal

Example 2

v	Label	d_v	π_v
s	P	0	-
b	T	9	s
c	T		
d	T	2	s
e	T		
t	T		

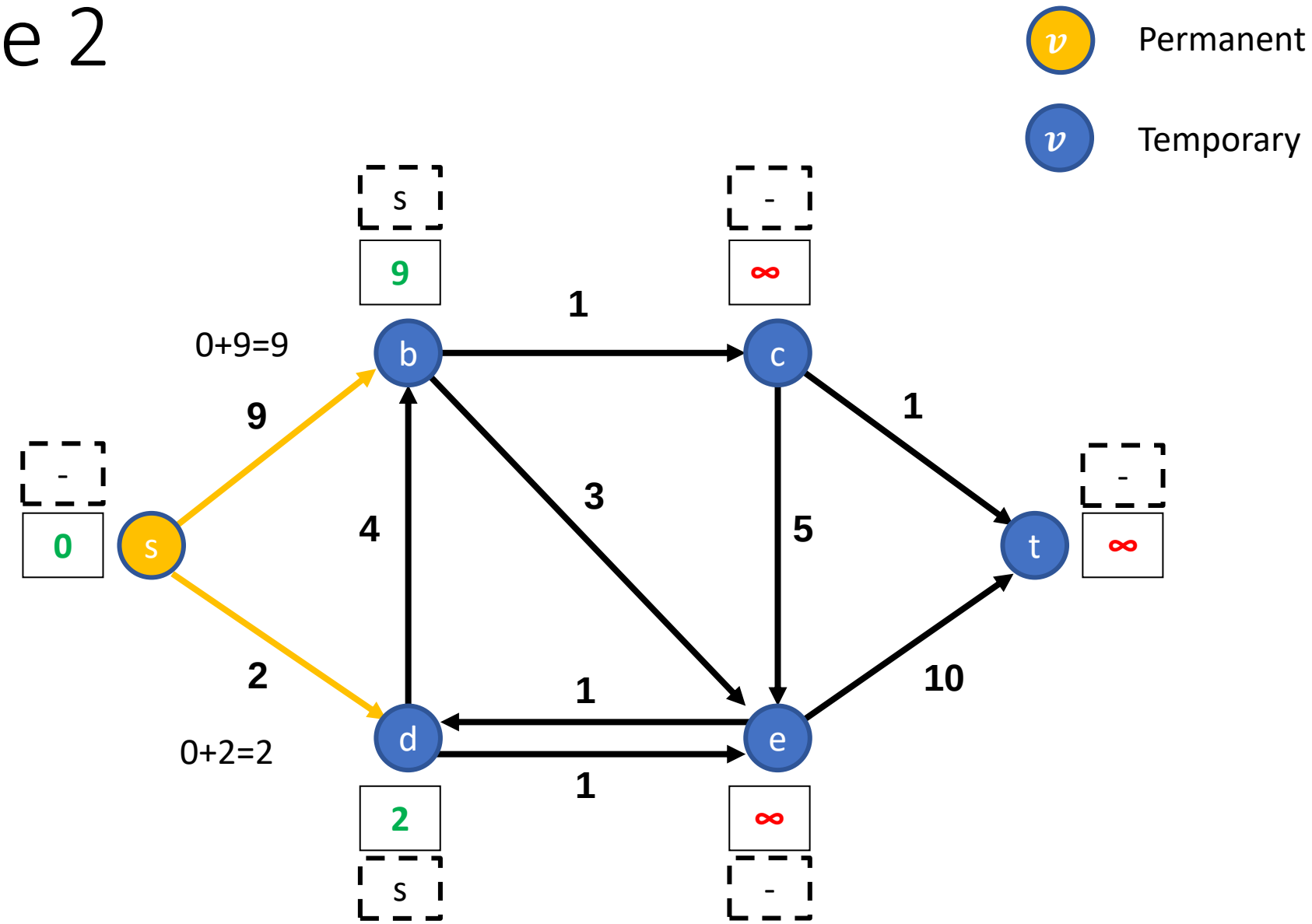

Update distances to reachable vertices which are labelled temporary

Sensitivity: Internal

Example 2

v	Label	d_v	π_v
s	P	0	-
b	T	9	s
c	T		
d	P	2	s
e	T		
t	T		

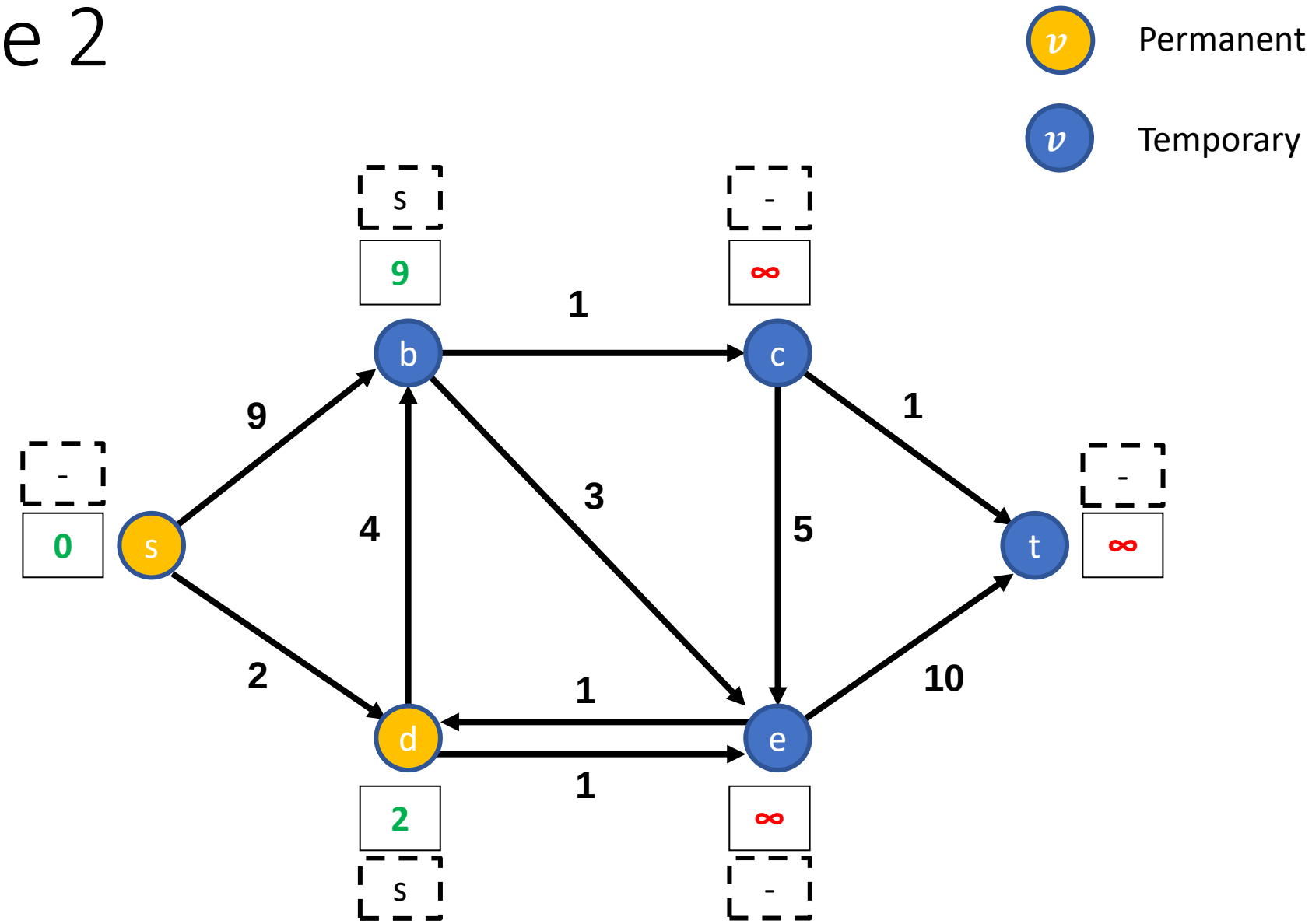

Label temporary vertex with minimum distance as permanent

Sensitivity: Internal

Example 2

v	Label	d_v	π_v
s	P	0	-
b	T	~~9~~ 6	~~s~~ d
c	T		
d	P	2	s
e	T	3	d
t	T		

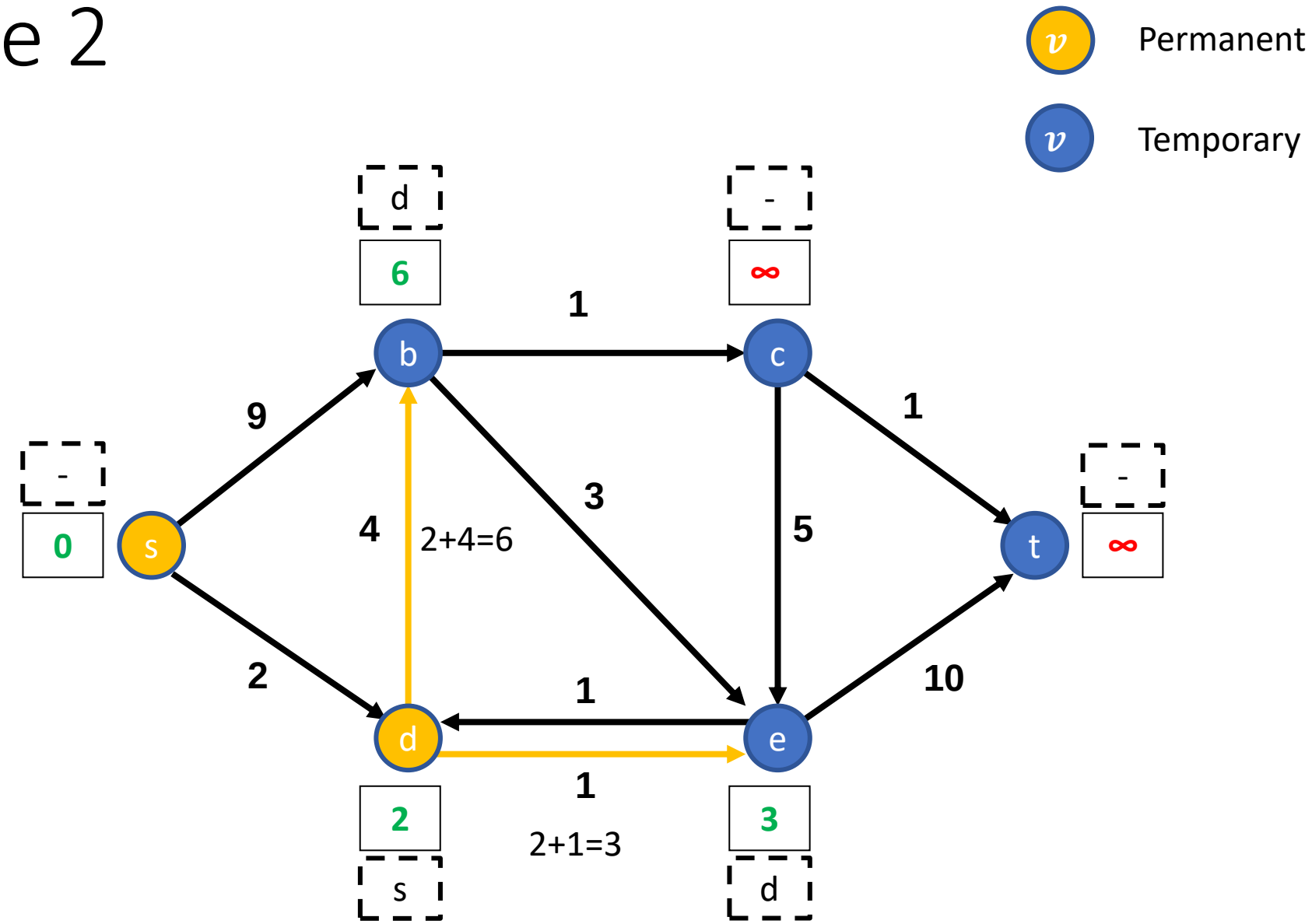

Update distances to reachable vertices which are labelled temporary

Sensitivity: Internal

Example 2

v	Label	d_v	π_v
s	P	0	-
b	T	6	d
c	T		
d	P	2	s
e	P	3	d
t	T		

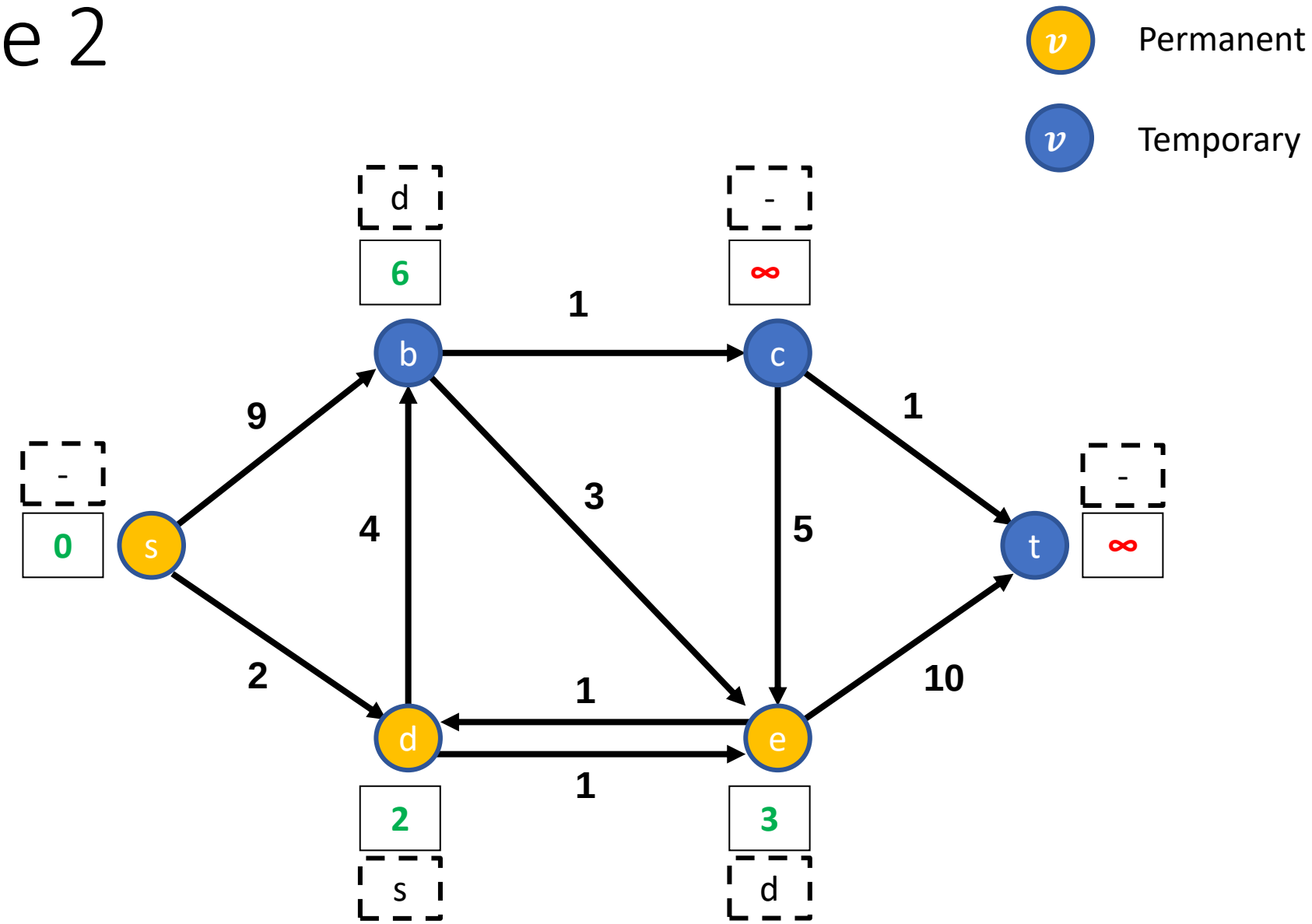

Label temporary vertex with minimum distance as permanent

Sensitivity: Internal

Example 2

v	Label	d_v	π_v
s	P	0	-
b	T	6	d
c	T		
d	P	2	s
e	P	3	d
t	T	13	e

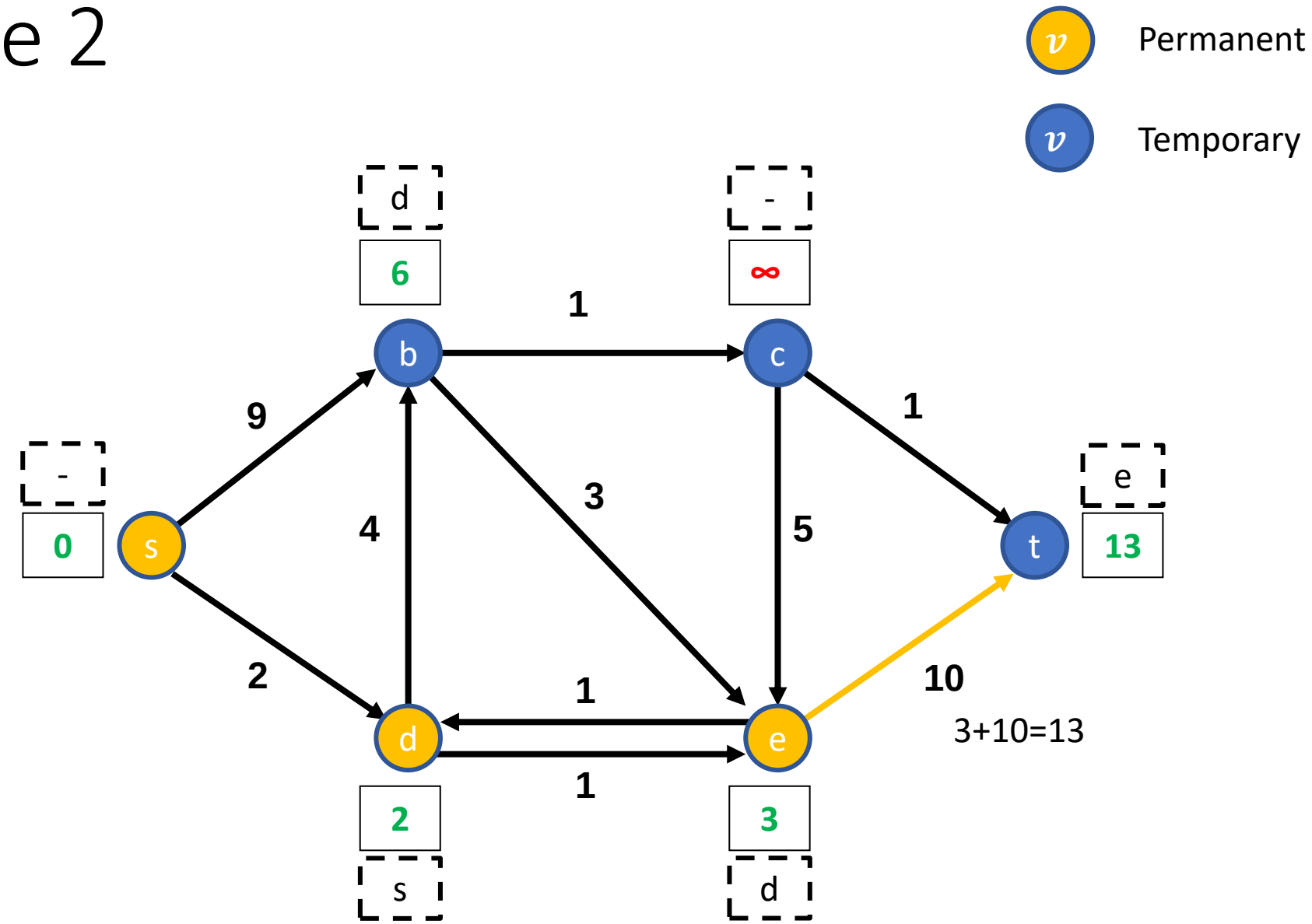

Update distances to reachable vertices which are labelled temporary

Sensitivity: Internal

Example 2

v	Label	d_v	π_v
s	P	0	-
b	P	6	d
c	T		
d	P	2	s
e	P	3	d
t	T	13	e

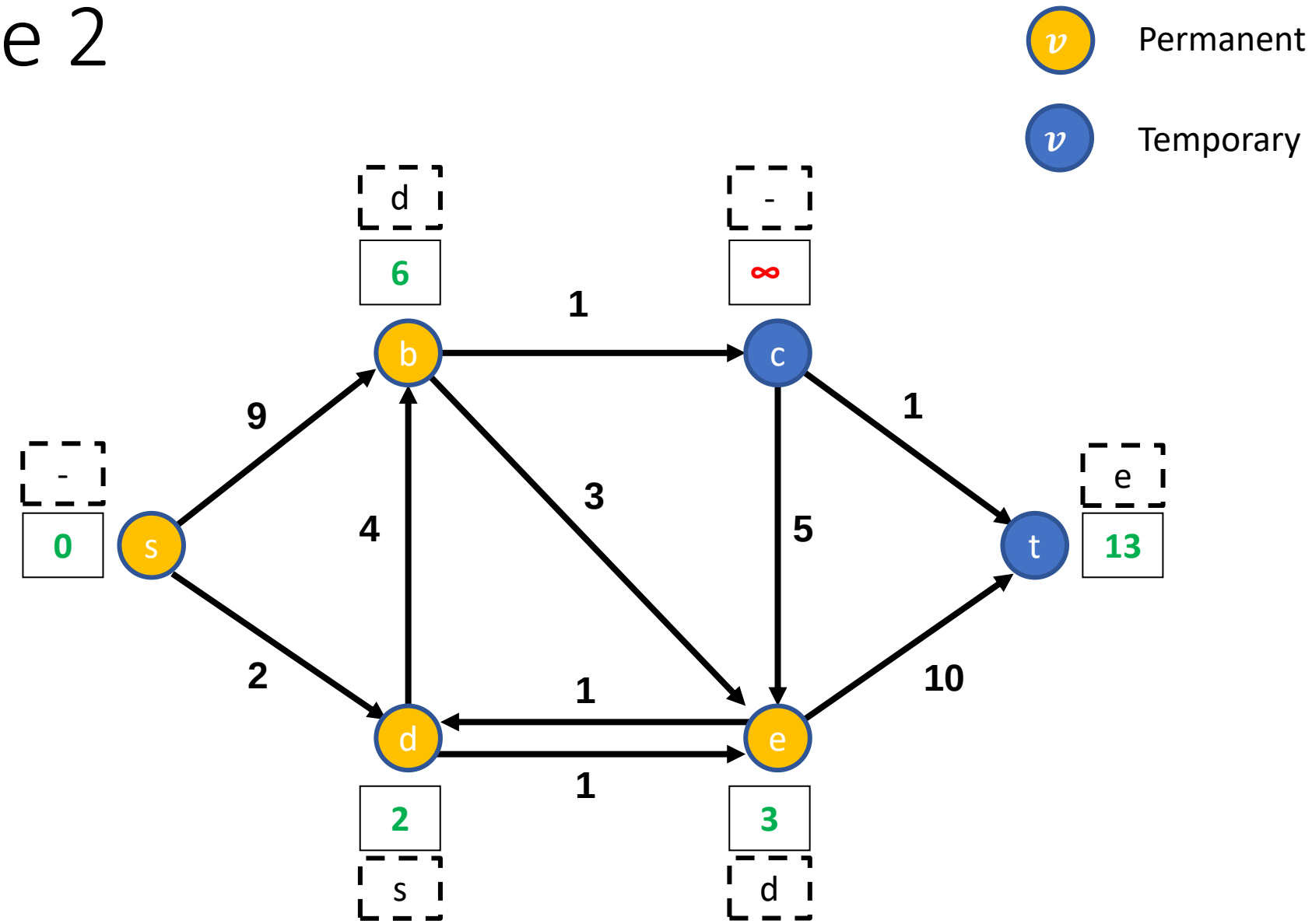

Label temporary vertex with minimum distance as permanent

Sensitivity: Internal

Example 2

v	Label	d_v	π_v
s	P	0	-
b	P	6	d
c	T	7	b
d	P	2	s
e	P	3	d
t	T	13	e

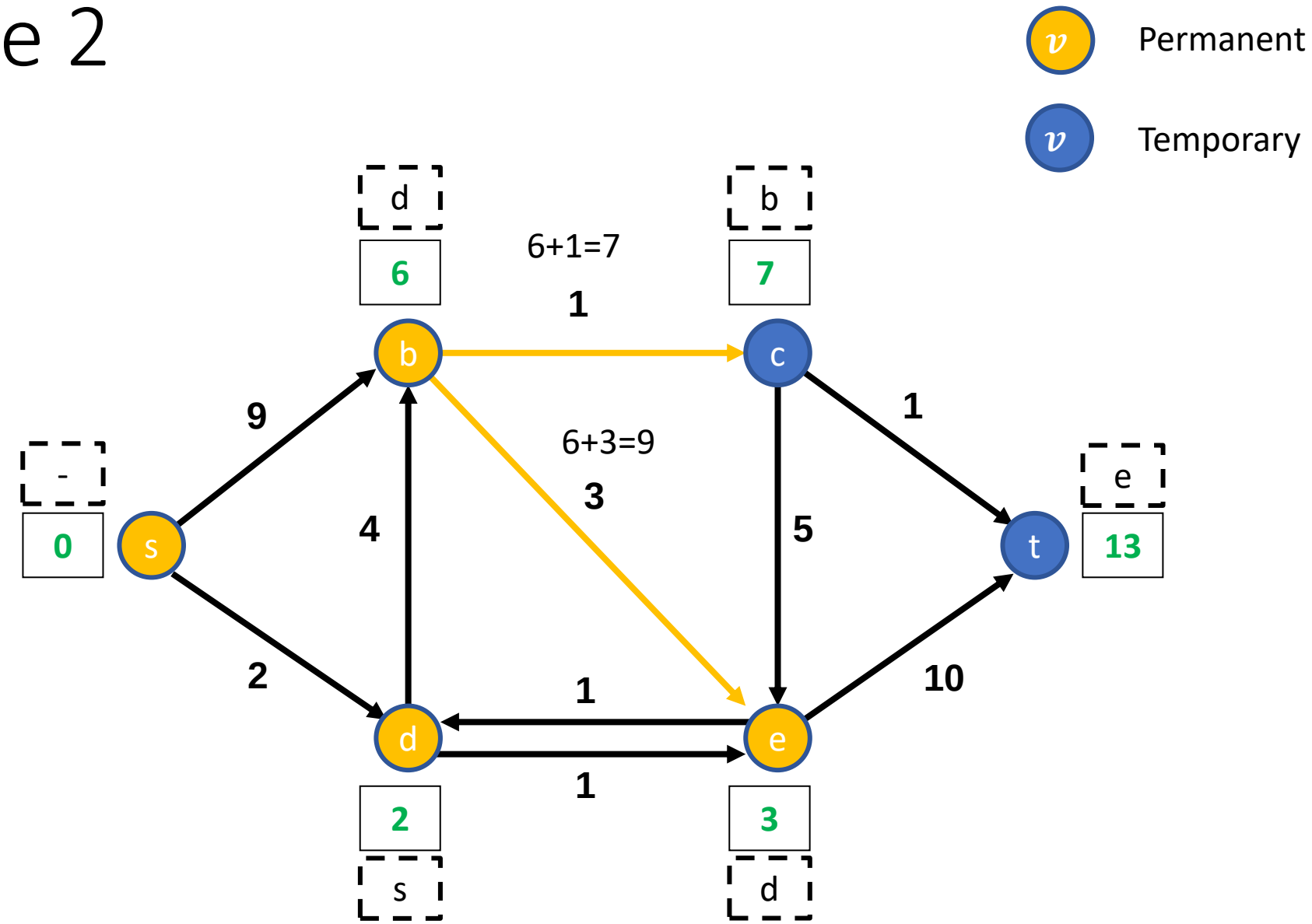

Update distances to reachable vertices which are labelled temporary

Sensitivity: Internal

Example 2

v	Label	d_v	π_v
s	P	0	-
b	P	6	d
c	P	7	b
d	P	2	s
e	P	3	d
t	T	13	e

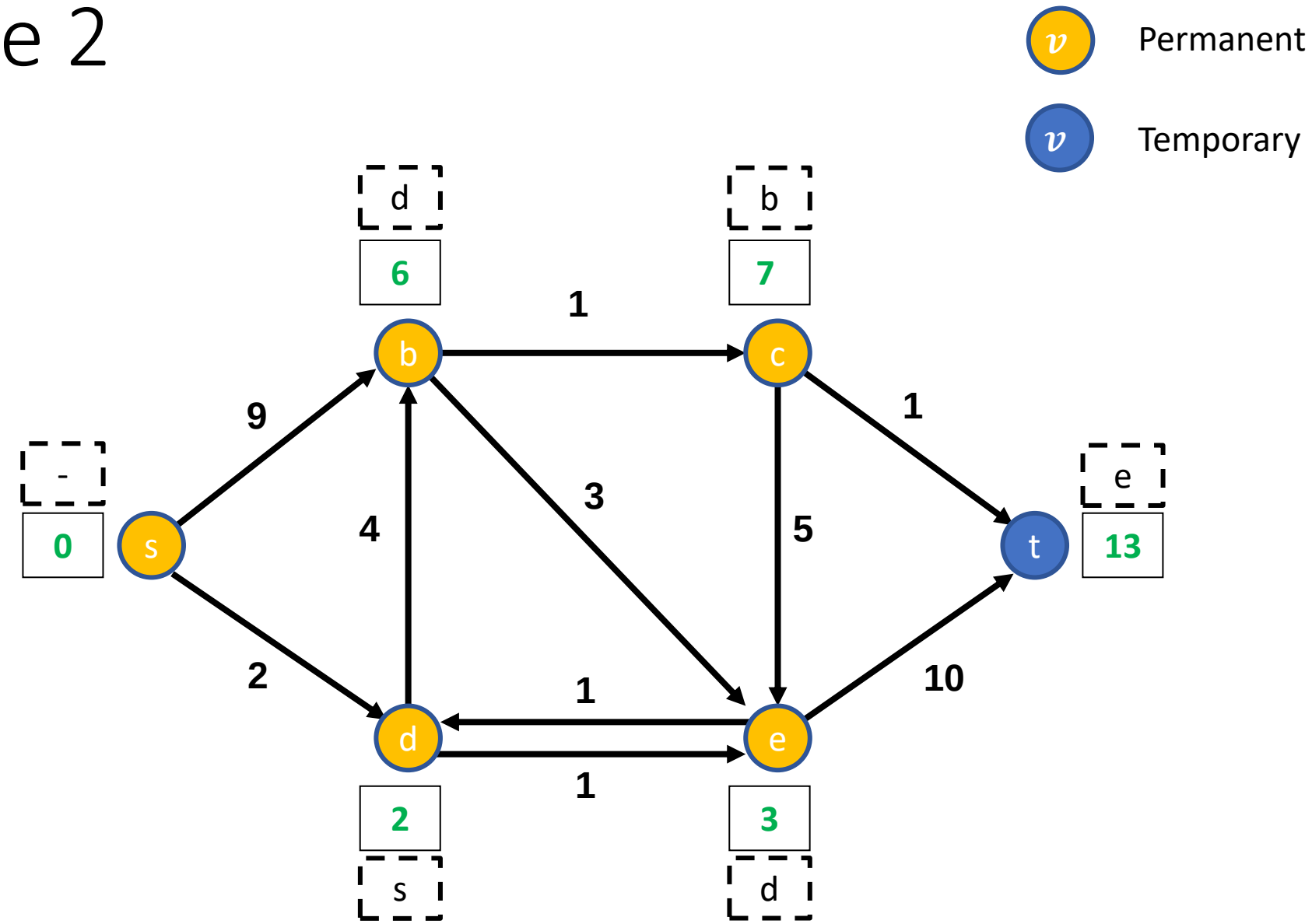

Label temporary vertex with minimum distance as permanent

Sensitivity: Internal

Example 2

v	Label	d_v	π_v
s	P	0	-
b	P	6	d
c	P	7	b
d	P	2	s
e	P	3	d
t	T	8	c

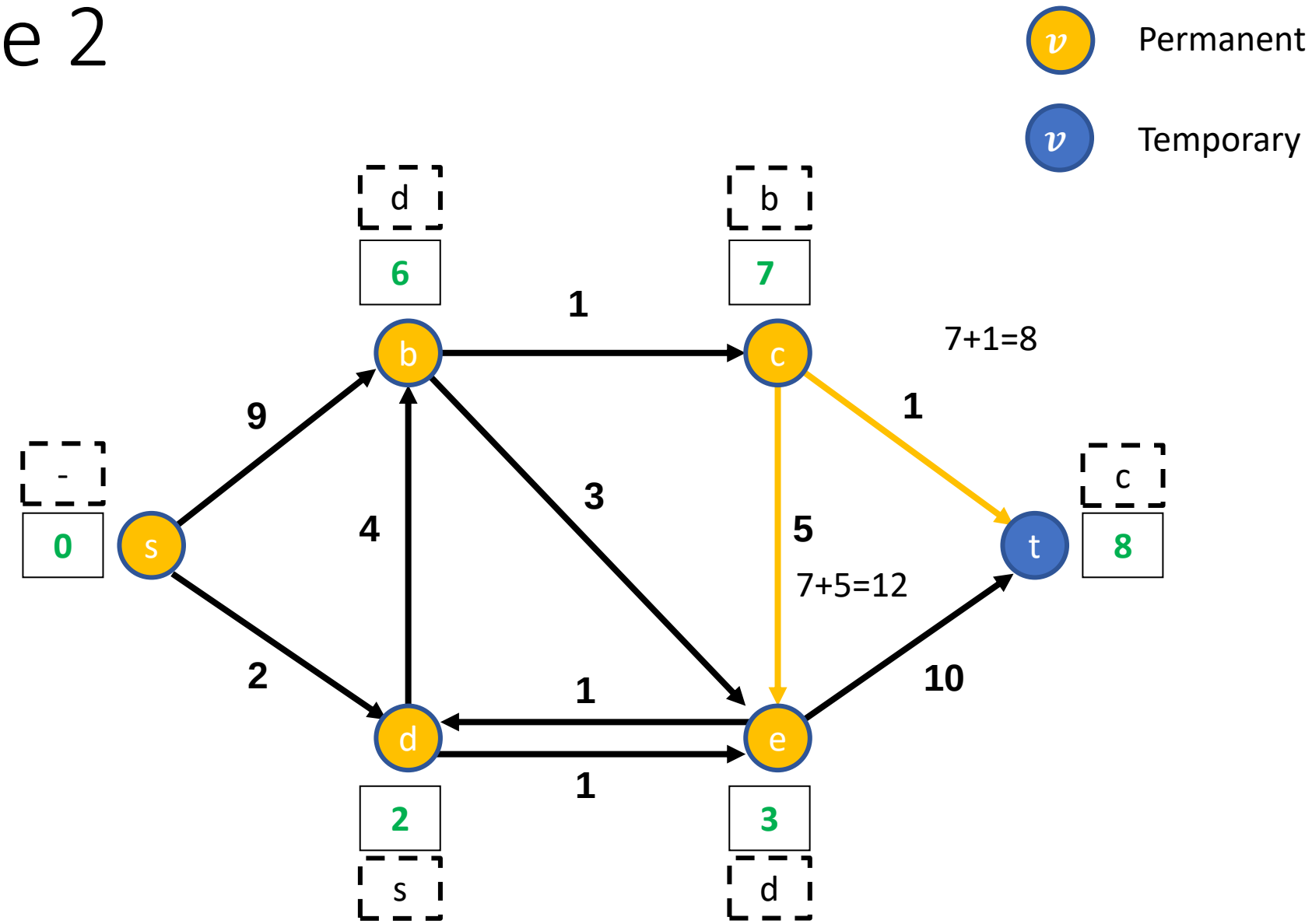

Update distances to reachable vertices which are labelled temporary

Sensitivity: Internal

Example 2

v	Label	d_v	π_v
s	P	0	-
b	P	6	d
c	P	7	b
d	P	2	s
e	P	3	d
t	P	8	c

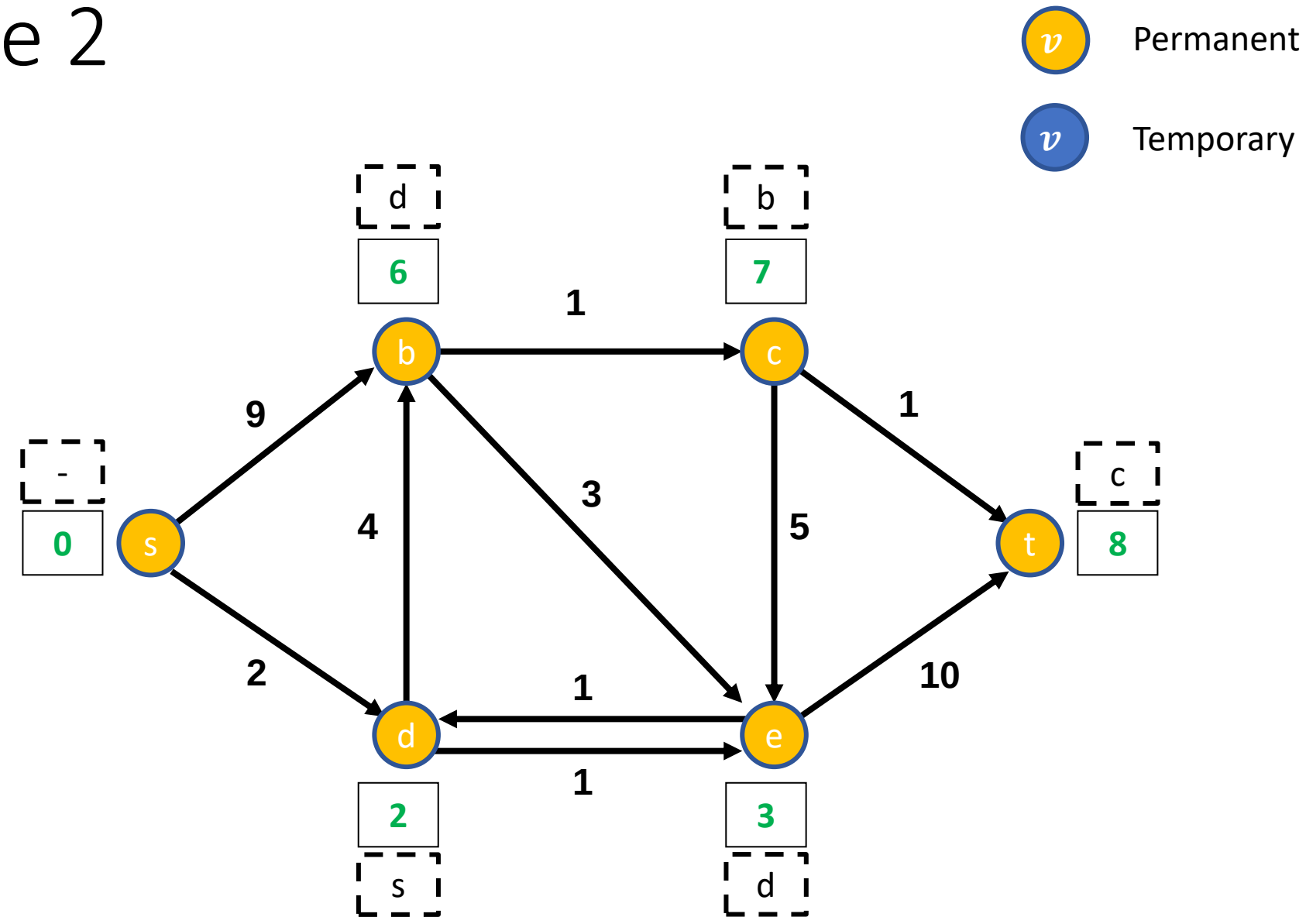

Label temporary vertex with minimum distance as permanent. All nodes reached. STOP

Sensitivity: Internal

Example 2

v	Label	d_v	π_v
s	P	0	-
b	P	6	d
c	P	7	b
d	P	2	s
e	P	3	d
t	P	8	c

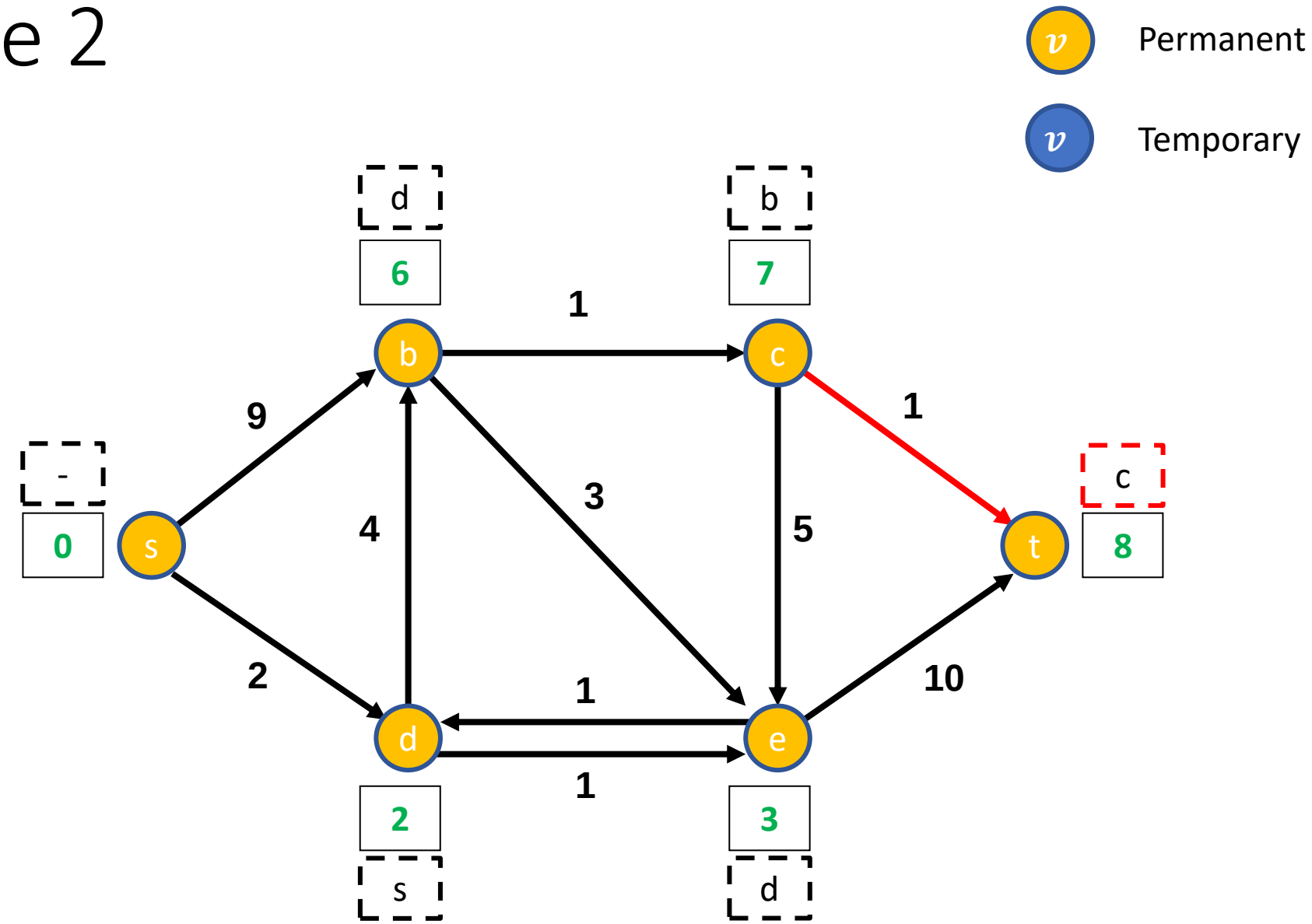

To compute the shortest path, work backwards from the source along the predecessor

Sensitivity: Internal

Example 2

v	Label	d_v	π_v
s	P	0	-
b	P	6	d
c	P	7	b
d	P	2	s
e	P	3	d
t	P	8	c

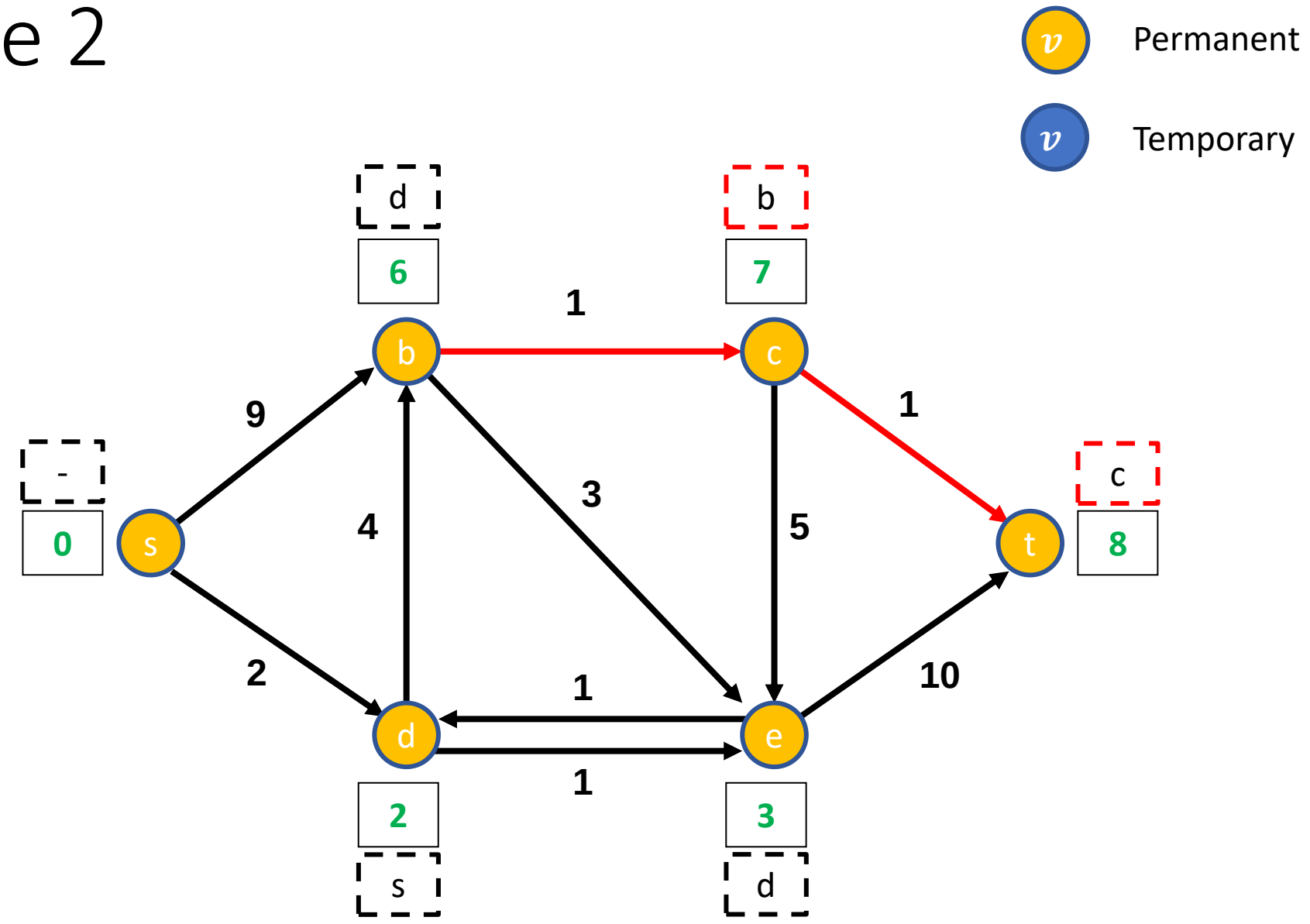

To compute the shortest path, work backwards from the source along the predecessor

Sensitivity: Internal

Example 2

v	Label	d_v	π_v
s	P	0	-
b	P	6	d
c	P	7	b
d	P	2	s
e	P	3	d
t	P	8	c

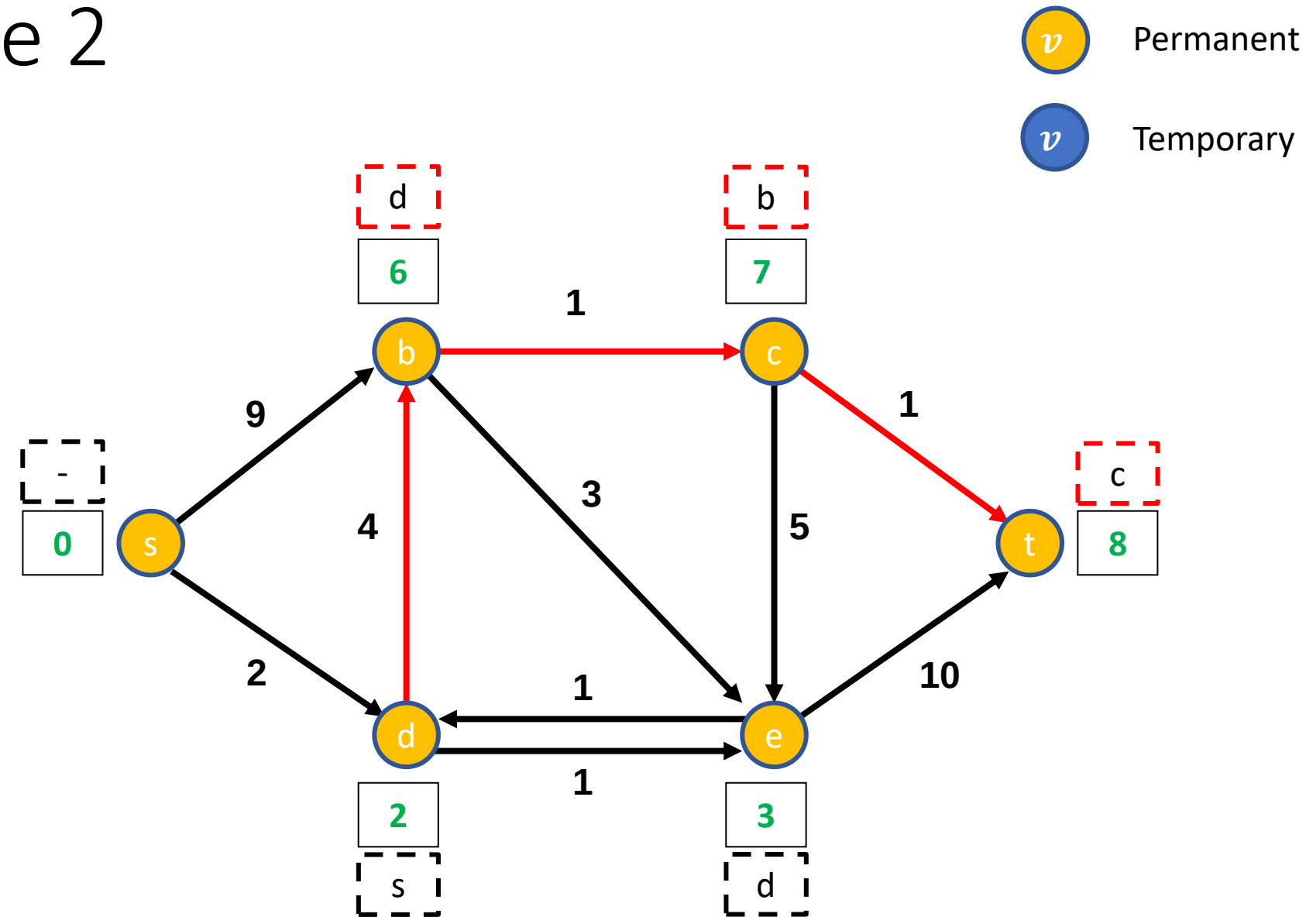

To compute the shortest path, work backwards from the source along the predecessor

Sensitivity: Internal

Example 2

v	Label	d_v	π_v
s	P	0	-
b	P	6	d
c	P	7	b
d	P	2	s
e	P	3	d
t	P	8	c

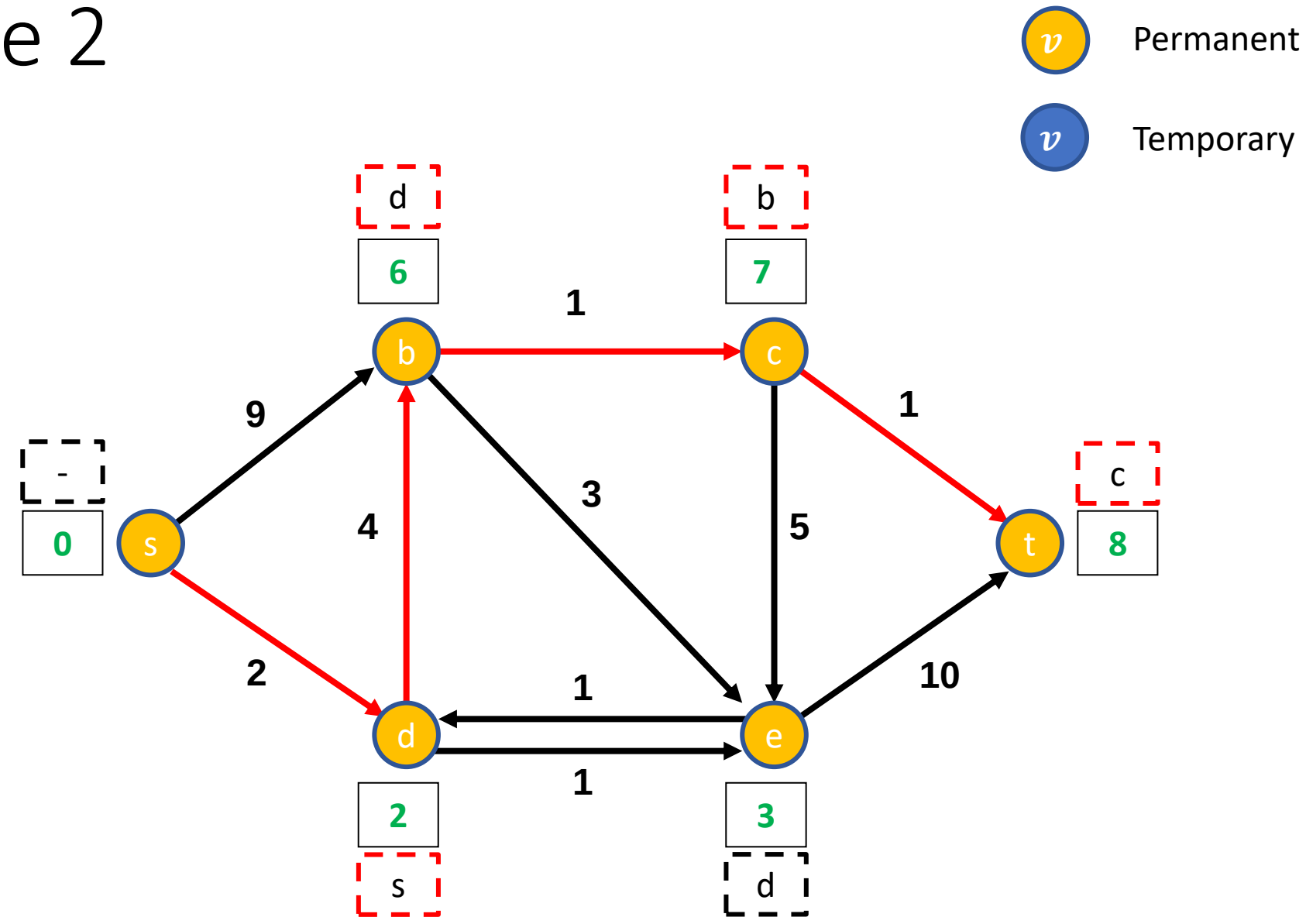

Shortest path from s to t is $s - d - b - c - t$ with a path length of 8

Sensitivity: Internal

Example 3

- Optimisation
- If we are interested in a given destination then…
- If we reach the destination vertex and all temporary nodes have a higher value. We can stop!
- This will be the optimal shortest path

Sensitivity: Internal

Dijkstra Example 3

v	Label	d_v	π_v
s	T	0	-
b	T		
c	T		
d	T		
e	T		
t	T		

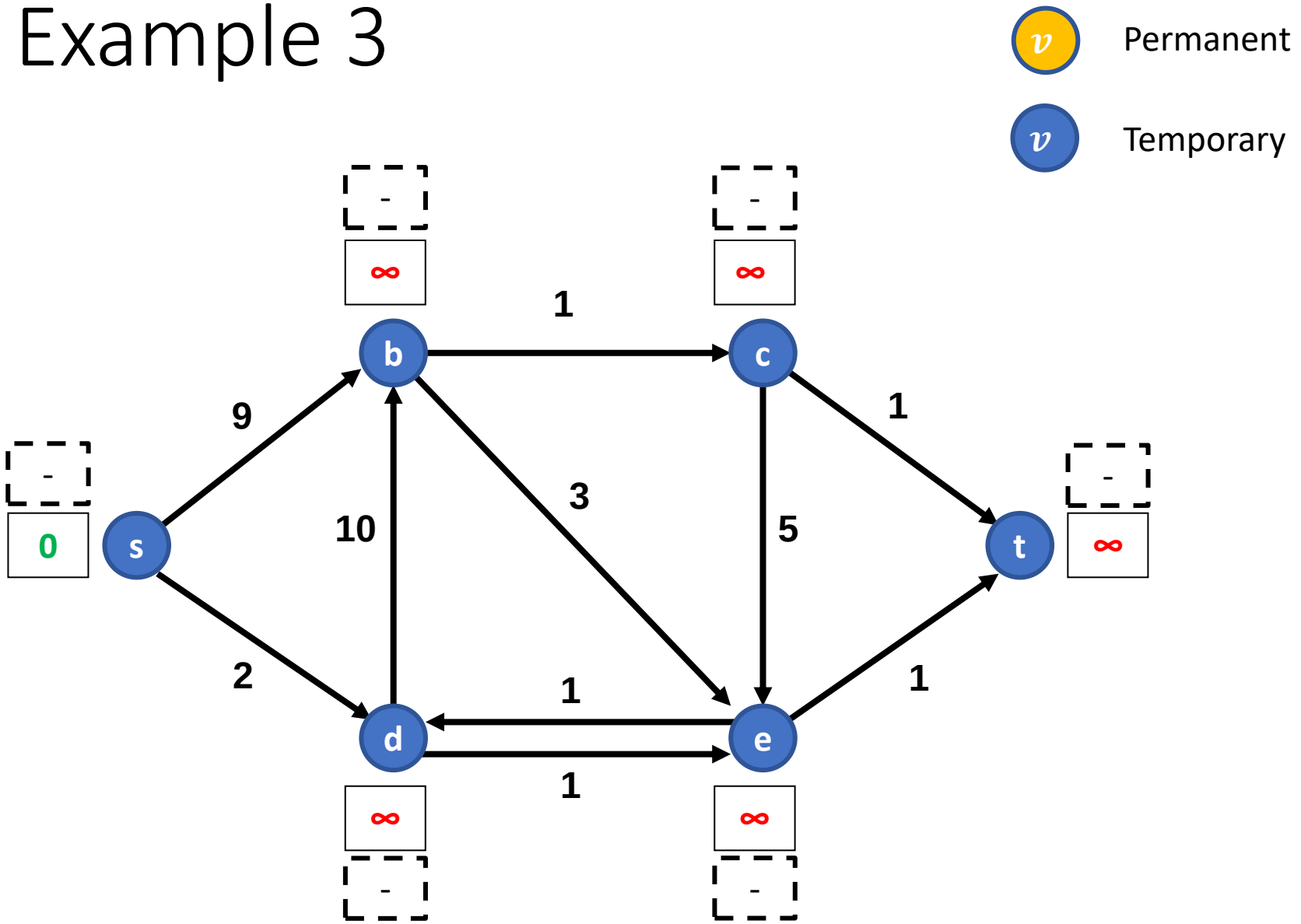

Initialise the network, source vertex has a distance of 0 and all other vertices a distance of ∞

Sensitivity: Internal

Example 3

v	Label	d_v	π_v
s	P	0	-
b	T		
c	T		
d	T		
e	T		
t	T		

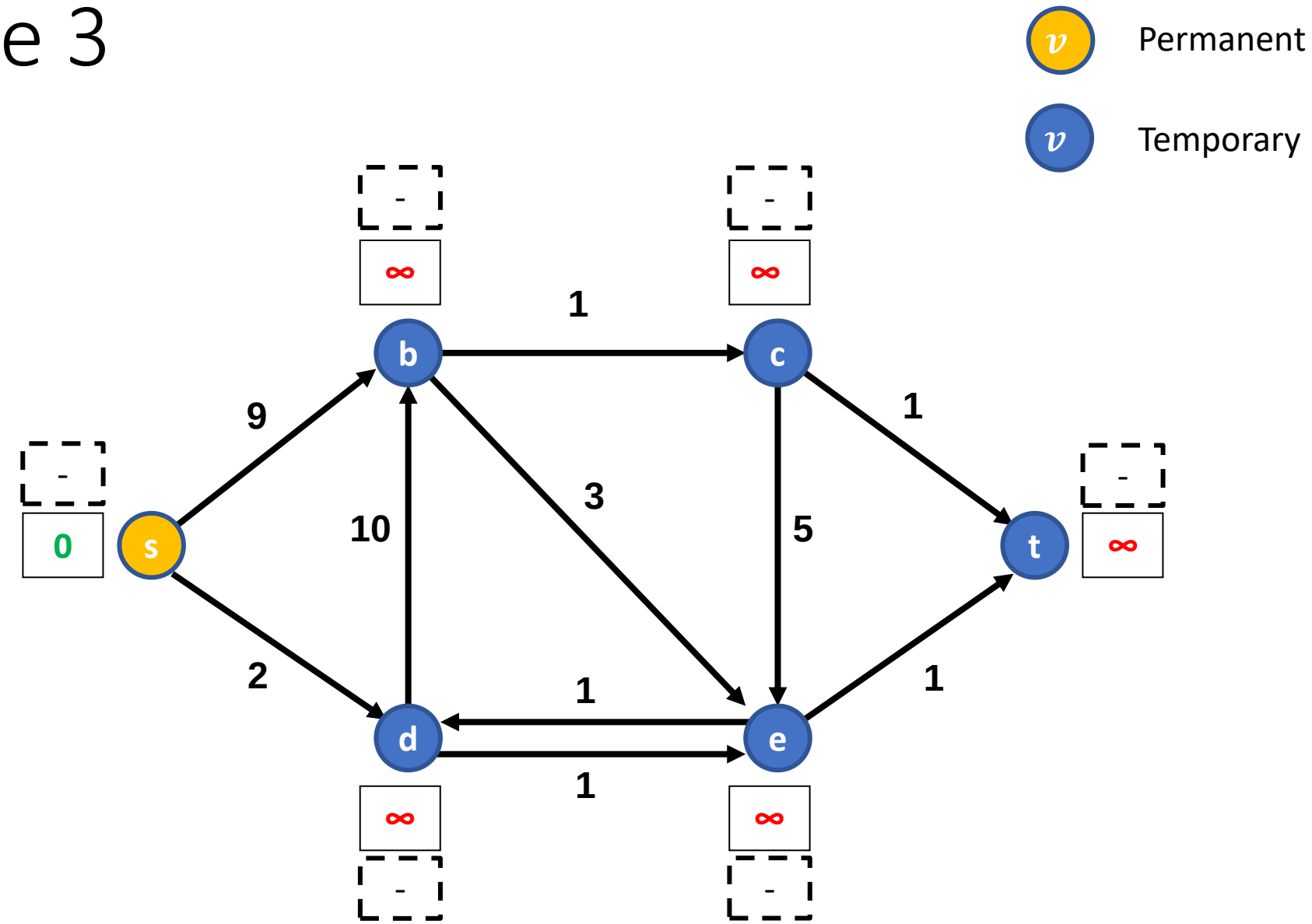

Label temporary vertex with minimum distance as permanent

Sensitivity: Internal

Example 3

v	Label	d_v	π_v
s	P	0	-
b	T	9	s
c	T		
d	T	2	s
e	T		
t	T		

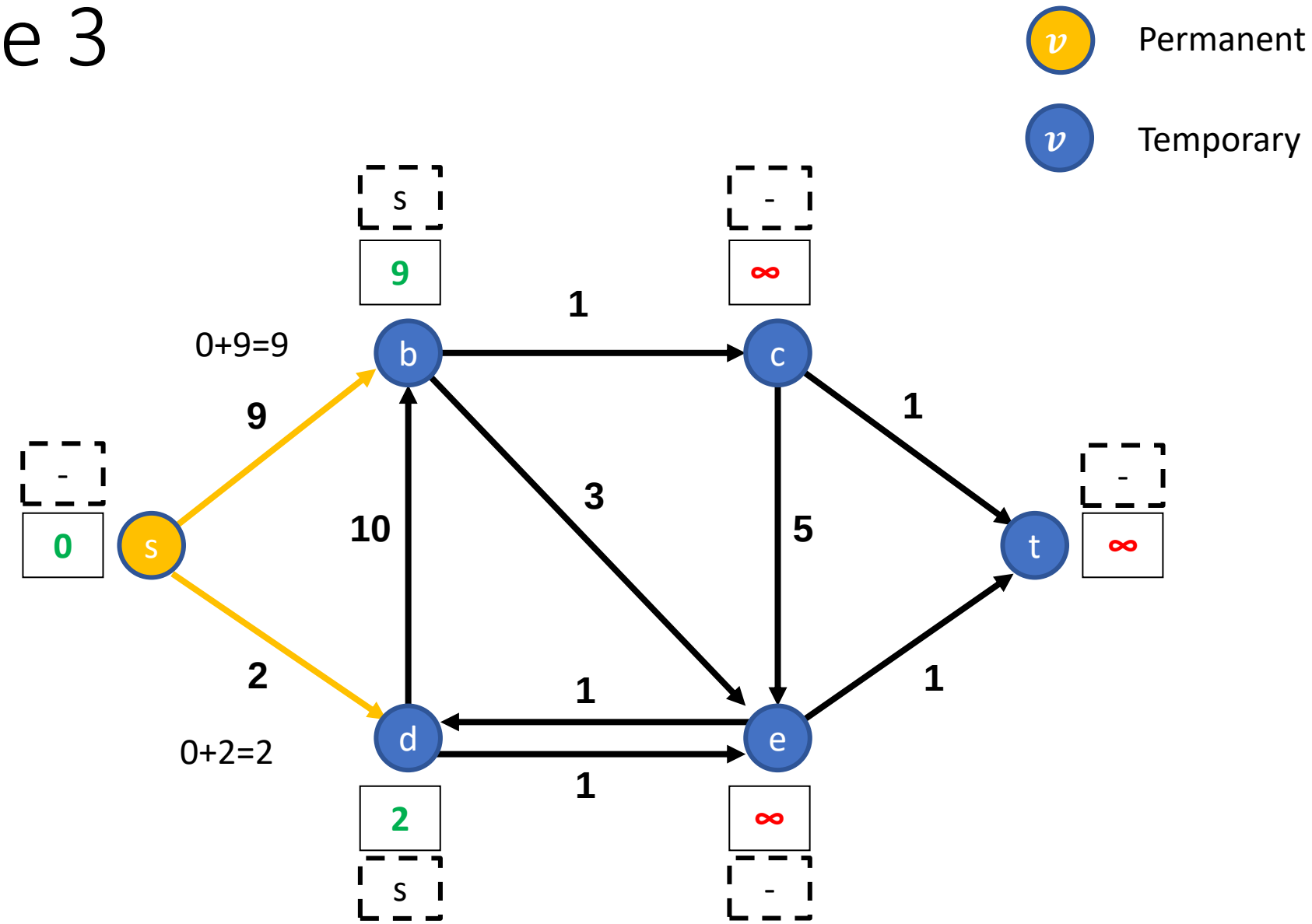

Update distances to reachable vertices which are labelled temporary

Sensitivity: Internal

Example 3

v	Label	d_v	π_v
s	P	0	-
b	T	9	s
c	T		
d	P	2	s
e	T		
t	T		

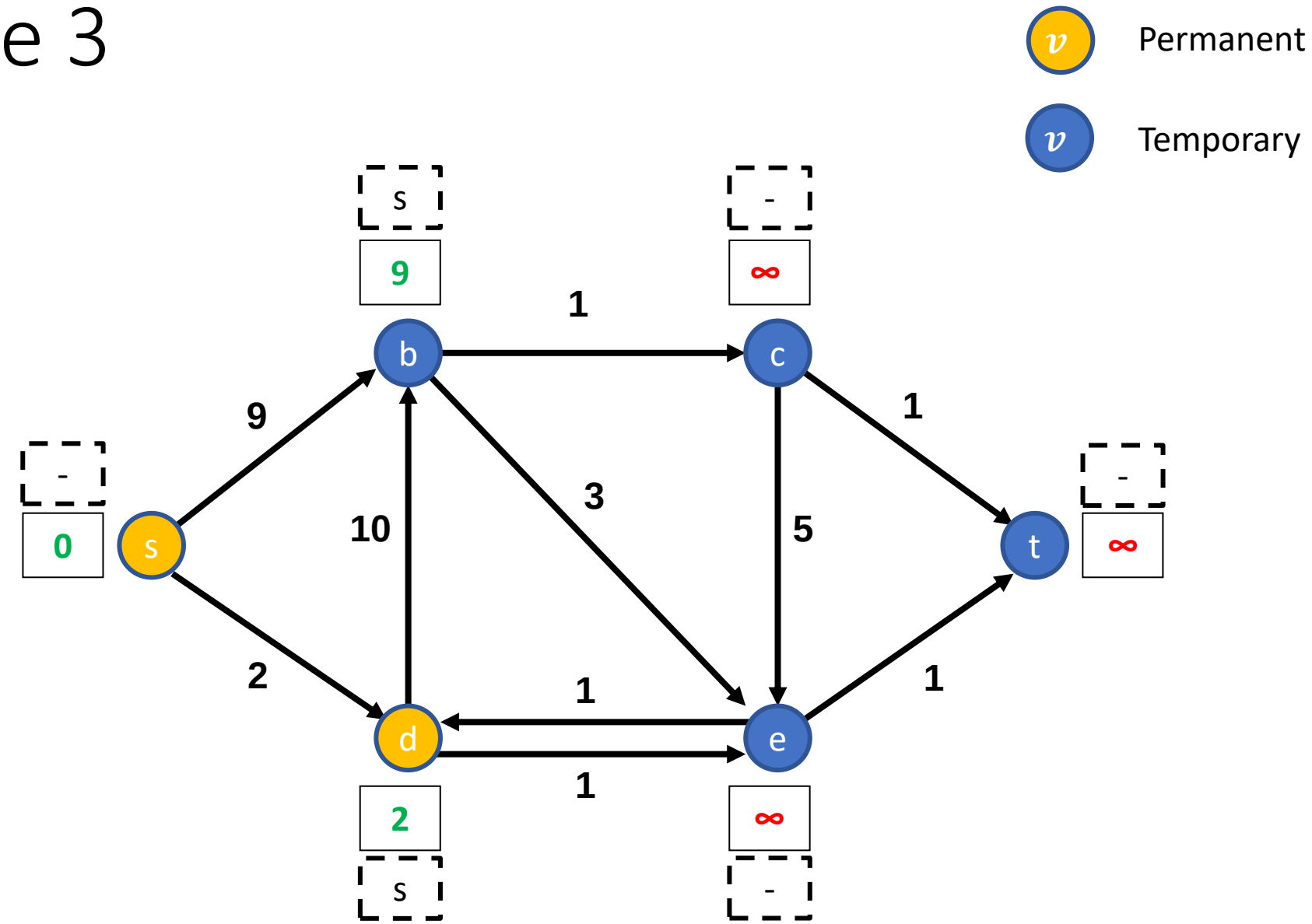

Label temporary vertex with minimum distance as permanent

Sensitivity: Internal

Example 3

v	Label	d_v	π_v
s	P	0	-
b	T	9	s
c	T		
d	P	2	s
e	T	3	d
t	T		

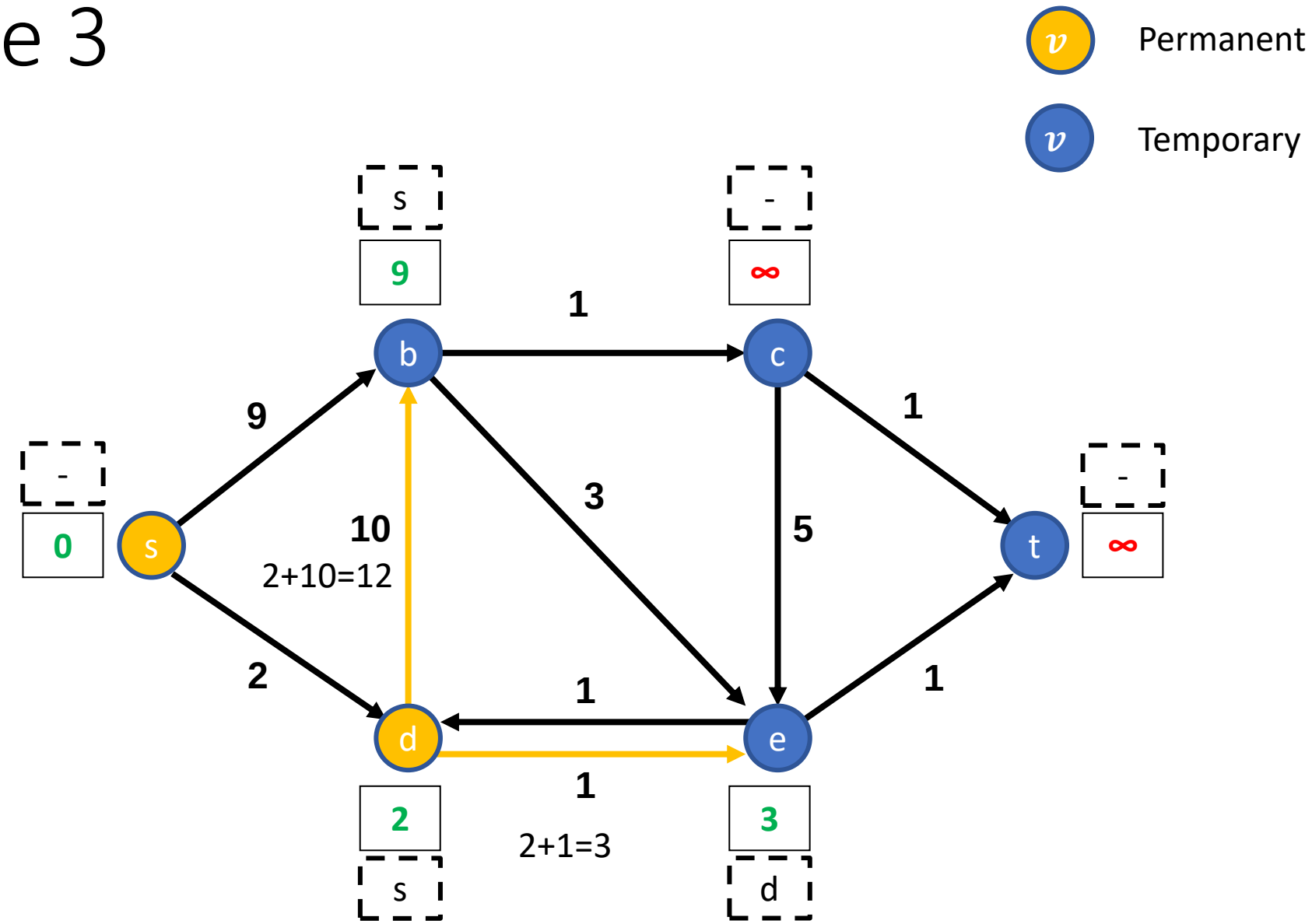

Update distances to reachable vertices which are labelled temporary

Sensitivity: Internal

Example 3

v	Label	d_v	π_v
s	P	0	-
b	T	9	s
c	T		
d	P	2	s
e	P	3	d
t	T		

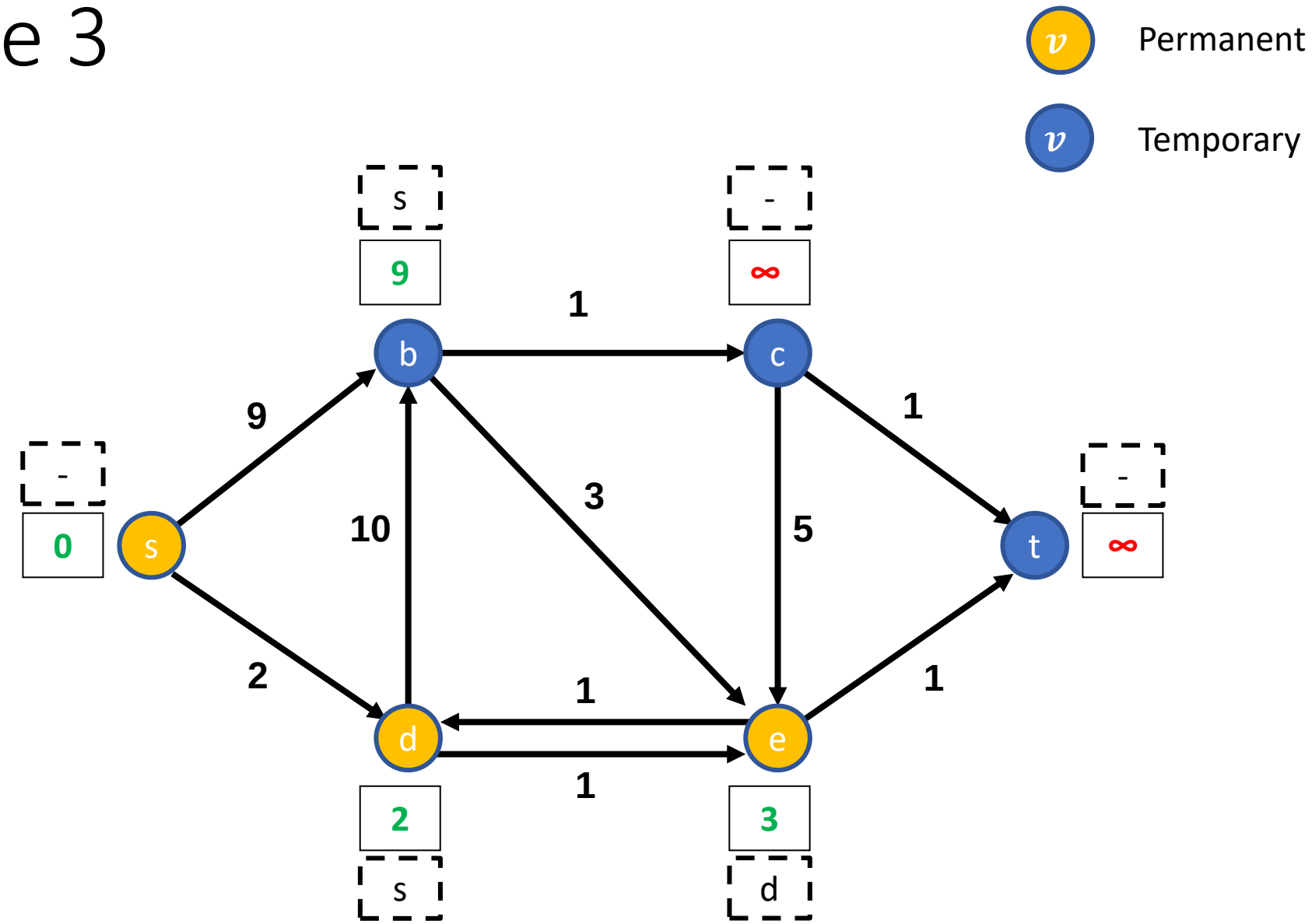

Label temporary vertex with minimum distance as permanent

Sensitivity: Internal

Example 3

v	Label	d_v	π_v
s	P	0	-
b	T	9	s
c	T		
d	P	2	s
e	P	3	d
t	T	4	e

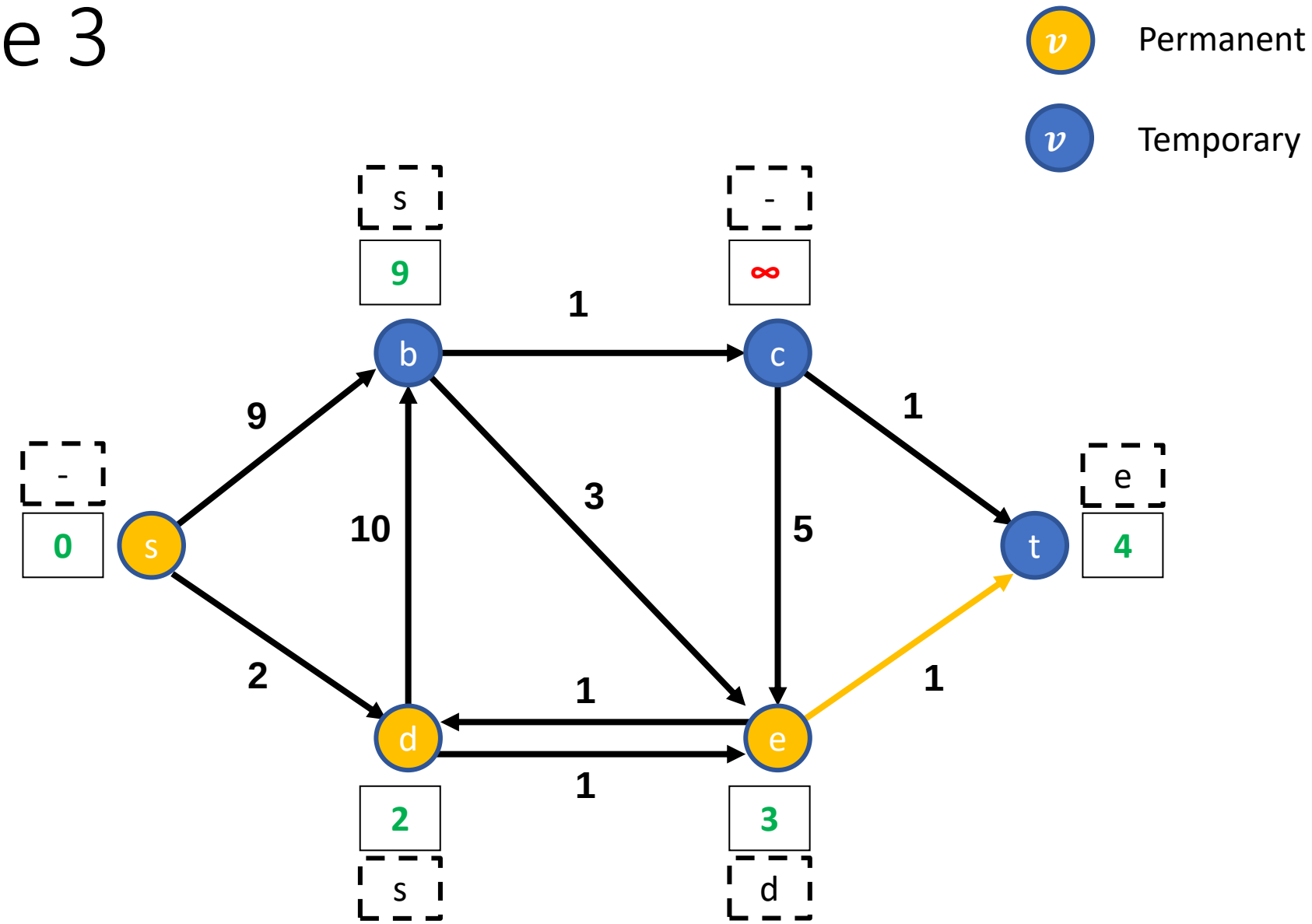

Label temporary vertex with minimum distance as permanent

Sensitivity: Internal

Example 3

v	Label	d_v	π_v
s	P	0	-
b	T	9	s
c	T		
d	P	2	s
e	P	3	d
t	P	4	e

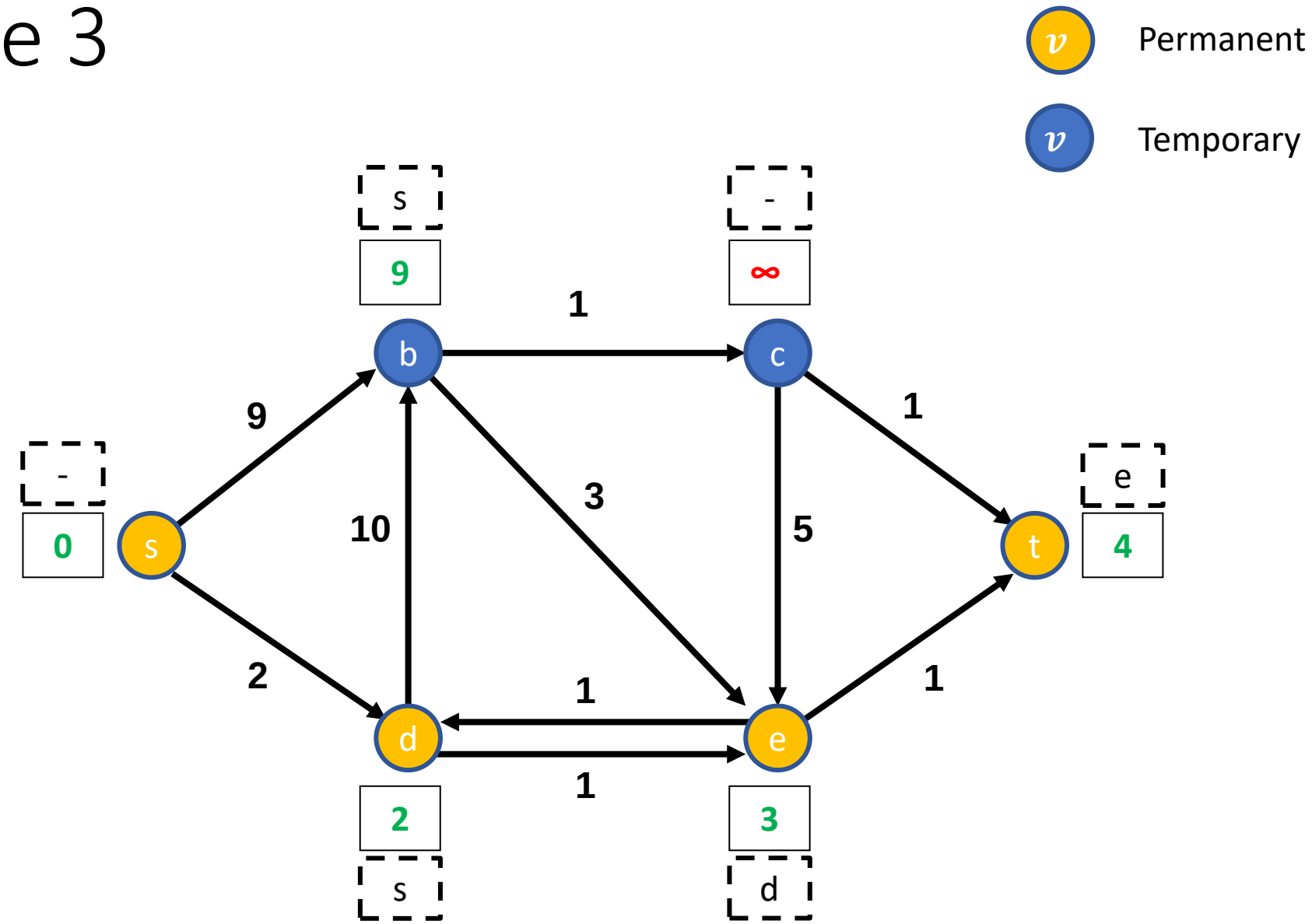

We have reached the destination and all temporary nodes have a higher distance
STOP

Sensitivity: Internal

Example 3

v	Label	d_v	π_v
s	P	0	-
b	T	9	s
c	T		
d	P	2	s
e	P	3	d
t	P	4	e

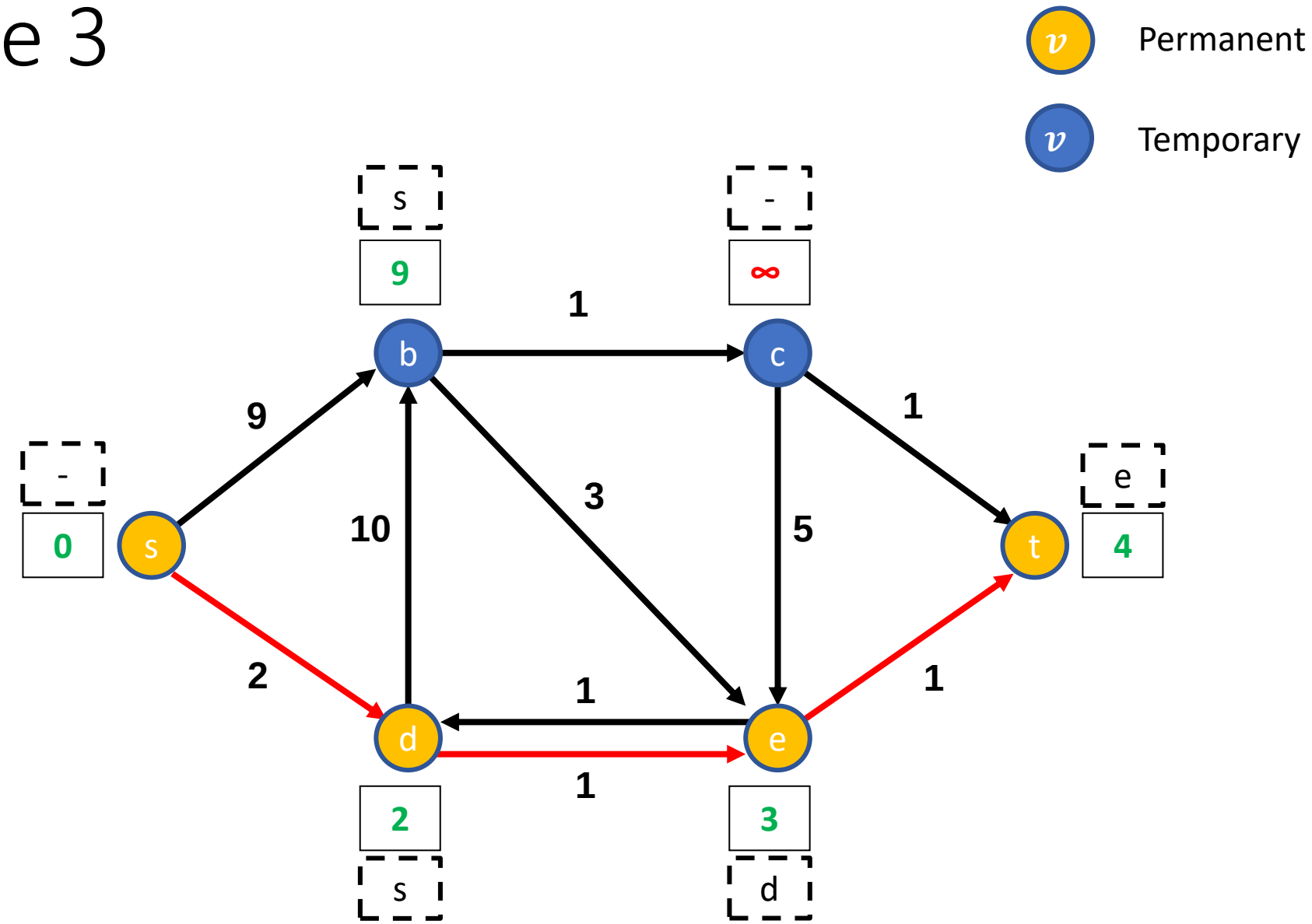

This is the optimal path

Sensitivity: Internal

References

Cormen, T. H., Leiserson, C. E., Rivest, R. L., Stein, C. (2001). *Introduction to Algorithms*. The MIT Press. ISBN: 0262032937

Taha, Hamdy. A - Operations Research: An Introduction (Tenth Edition)

Sensitivity: Internal